March 24, 2026 CCN 335528

Ms. Natalie K. Walker
Hazardous Waste Bureau Chief
Waste Management and Remediation Division
1410 North Hilton
Boise, ID 83706

SUBJECT: Transmittal of the Hazardous Waste Management Act/Resource Conservation and Recovery Act (HWMA/RCRA) Part A Permit Application for the Idaho National Laboratory, Volume 1 – Idaho Nuclear Technology and Engineering Center, Book 1 of 1, Revision: March 2026, EPA ID No. ID4890008952

Dear Ms. Walker:

Please find attached the *HWMA/RCRA Part A Permit Application for the Idaho National Laboratory, Volume 1 – Idaho Nuclear Technology and Engineering Center (INTEC)*, Book 1 of 1, Revision: March 2026. This revision updates information on the Hazardous Waste Permit Part A Form and the RCRA Subtitle C Identification Form, and documents additional Idaho Department of Environmental Quality (DEQ) correspondence. Additionally, editorial/administrative changes were made, as necessary.

The signed certification statements required by the Idaho Administrative Procedure Act 58.01.05.012 [Title 40 of the Code of Federal Regulations (CFR) 270.11(d) and 270.30(k)] are also attached.

This document is submitted by Idaho Environmental Coalition as authorized by the U.S. Department of Energy. If you have questions regarding this information, please contact Paula Dickinson at (208) 533-0405 or (208) 770-1283.

Sincerely,

CHRISTOPHER VILORD (Affiliate) Digitally signed by CHRISTOPHER VILORD (Affiliate) Date: 2026.03.24 16:02:02 -06'00'

Christopher E. Vilord, Senior Manager
Environmental Programs
Idaho Environmental Coalition, LLC – ICP

PD:CHH

Attachments (for addressee and those indicated only)

cc: DEQ (w/ Atts.)
D. C. Sawyer
A. Ramsey

DOE ICP
N. A. Balsmeier
M. E. Bates
M. Boline
N. Brooks (w/ Atts.)
J. L. Eaton
C. L. Gregg
A. S. Nebeker
G. H. Ruiz
T. Sanders
S. L. Walker

DOE-ID
J. L. Anderson
R. W. Bezzant
T. F. Crowther
S. L. Goodwin (w/ Atts.)
D. J. Moorman
K. N. Trusty
DOE-ID Admin Support Center (w/ Atts.)
DOE-ID Records Center (w/ Atts.)

IEC
S. J. Coletti
D. W. Coyne
W. E. Kirby
D. B. Kirkham (w/ Atts.)
J. T. Nahay
K. S. Southwick

U.S. Department of Energy
Idaho Operations Office

HWMA/RCRA Part A Permit Application for the Idaho National Laboratory

Volume 1 – Idaho Nuclear Technology and Engineering Center

Book 1 of 1

EPA ID No. ID4890008952

Rev. March 2026

ICP Idaho Cleanup Project

SUMMARY OF THE PART A PERMIT APPLICATION

SUMMARY OF THE
HWMA/RCRA PART A PERMIT APPLICATION FOR THE
IDAHO NATIONAL LABORATORY
EPA ID No. ID4890008952

1. INTRODUCTION

The March 2026 revision to the Hazardous Waste Management Act (HWMA)/ Resource Conservation and Recovery Act (RCRA) Part A Permit Application for the Idaho National Laboratory (INL) – Volume 1, Idaho Nuclear Technology and Engineering Center (INTEC), was primarily completed to update information on the Hazardous Waste Permit Part A Form and the RCRA Subtitle C Site Identification Form and to provide updated Department of Environmental Quality (DEQ) correspondence. Additionally, this revision provides editorial/typographical changes as necessary.

Section 2 of this Summary provides changes in facility/unit names for clarification to the user. Summary Section 3 provides the justification for the removal of interim status units from the Part A since the March 1995 revision to the Part A permit application. Finally, facility-specific process description information is provided for all approved interim status units at the INL (as applicable to Volume 1). This information is found in the Part A Permit Application, Hazardous Waste Permit Information Form (OMB #: 2050-0024/8700-12, 8700-13 A/B, 8700-23), Supplement B to Item 6. Process Codes and Design Capabilities for the INTEC.

This permit application is arranged according to the format of EPA Form: RCRA Subtitle C Site Identification Form (OMB#: 2050-0024/8700-12, 8700-13 A/B, 8700-23), and the Hazardous Waste Permit Part A Form (OMB#: 2050-0024/8700-12, 8700-13 A/B, 8700-23). The RCRA Subtitle C Site Identification Form provides general sitewide information and the Department of Energy Idaho Operations Office (DOE Idaho) owner and the DOE-Idaho designated contractor certification of the entire Part A Permit Application. This information is found in its entirety immediately following the "DEQ Closure Approval of Interim Status Units" section of the application. The Hazardous Waste Permit Part A Form is divided into the following sections: Items 1 - 5 that provide general owner/operator information; Item 6 that provides process codes and design capacities for the interim status unit (Tank Farm Facility); Item 7 that provides a description of the hazardous waste including the EPA hazardous waste numbers (HWNs) and the estimated annual quantity of waste handled for the interim status unit; Item 8 that provides a topographic map of the INTEC facility at the INL where the interim status unit is located; Item 9 that

provides a scale drawing of the INTEC facility at the INL where the interim status unit is located; and Item 10 that provides a photo of the interim status unit/location at the INL

2. FACILITY/UNIT NAME CHANGES

The U.S. Department of Energy (DOE) selected the Battelle Energy Alliance, LLC (BEA) to establish the INL as the Nation's premier laboratory for nuclear energy research, development, demonstration, and education. The INL has combined the research and development components of the Idaho National Engineering and Environmental Laboratory (INEEL) and Materials and Fuel Complex (MFC). The INL began operating under this new name and contract on February 1, 2005.

The DOE awarded a second major contract at the INL that focused on completing the cleanup mission in Idaho. The DOE awarded the initial Idaho Cleanup Project (ICP-I) contract in March 2005 to CH2M•WG Idaho, LLC (CWI), with May 1, 2005, as the effective start date of the ICP contract. DOE awarded CWI the ICP-II contract commencing on October 1, 2012, and running through May 31, 2016. DOE awarded Fluor Idaho, LLC, the Idaho Cleanup Core Contract (ICP Core) commencing on June 1, 2016, and running through December 31, 2021. The DOE awarded the current Idaho Cleanup Project (ICP) to the Idaho Environmental Coalition, LLC (IEC), with an effective start date of January 1, 2022. The purpose of the ICP contract is to safely accomplish as much of the remaining DOE Office of Environmental Management's (DOE-EM) cleanup mission at the INL as possible within available funding while meeting regulatory and legal requirements.

3. JUSTIFICATION FOR REMOVAL OF INTERIM STATUS UNITS

Table 1, below, provides a synopsis of all RCRA-regulated interim status units that have been closed since the issuance of the March 1995 edition of the HWMA/RCRA Part A Permit Application for the INL. The unit names and all corresponding information on these closed units have been removed from this revision of the Part A permit application.

Table 1. Summary of closed interim status units at the INL.

INTERIM STATUS UNIT NAME	LOCATION	CLOSURE JUSTIFICATION
Transuranic Storage Area (TSA) Interim Status Unit	Advanced Mixed Waste Treatment Project (AMWTP)	Completion of activities specified in the approved closure plan. Interim status terminated by the DEQ on 10/10/23.
TFF Tanks: VES-WM-180 through VES-WM-186 and VES-WM-103 through VES-WM-106	INTEC	Phase I through Phase IV Closure activities completed in accordance with the plan except for a few minor deviations. DEQ approved certification of closure on 10/05/09.
CPP-603 Storage Tank (VES-SFE-106)	INTEC	Completion of activities specified in the approved closure plan. Interim status terminated by the DEQ on 5/12/09.
CPP-640 Headend Storage Tank System	INTEC	Completion of activities specified in the approved closure plan. Interim status terminated by the DEQ on 6/12/08.
D-Cell Container Storage Unit	INTEC	Completion of activities specified in the approved closure plan. Interim status terminated by the DEQ on 1/05/05.
NWCF Calciner	INTEC	Completion of activities specified in the approved closure plan. Interim status as a mixed waste treatment facility terminated by the DEQ on 12/14/04.
Test Area North (TAN)-647	TAN	Completion of activities specified in the approved closure plan. Interim status terminated by the DEQ on 1/09/04.
Waste Reduction Operations Complex (WROC) Repackaging – included: • Waste Experimental Reduction Facility (WERF) Repacking Unit • Mixed Waste Storage Facility Repackaging	WERF/WROC	Completion of activities specified in the approved closure plan. DEQ terminated interim status for the WERF Repackaging unit on 9/30/03. DEQ terminated interim status on 5/10/04.
WERF Waste Stabilization	WERF/WROC	Completion of activities specified in the approved closure plan. DEQ terminated interim status on 9/30/03.

Table 1. (continued)

INTERIM STATUS UNIT NAME	LOCATION	CLOSURE JUSTIFICATION
WERF Drum Feed Blending Unit	WERF/WROC	Completion of activities specified in the approved closure plan. DEQ terminated interim status on 9/30/03.
Waste Characterization Facility (WCF)	Radioactive Waste Management Complex (RWMC)	Administrative closure requested and granted due to the fact that the WCF was proposed for construction but never constructed. Interim status terminated by the DEQ on 9/25/00.
Waste Storage/Feed Tanks	WERF/WROC	Administrative closure requested and granted due to the fact that the unit was proposed for construction but never constructed. Interim status terminated by the DEQ on 5/16/00.
Process Experimental Pilot Plant (PREPP) Incinerator and Waste Stabilization Units	Test Area North (TAN)	Completion of activities specified in the approved PREPP closure plan. Interim status terminated by the DEQ on 3/07/00.
Heat Transfer Reactor Experiment (HTRE-3)	Experimental Breeder Reactor -1 (EBR-I)	Completion of activities specified in the approved HTRE-3 closure plan. Interim status terminated by the DEQ on 1/31/00.
Waste Calcine Facility (WCF): • WCF Evaporator • WCF Storage Tanks • WCF High Efficiency Particulate Air (HEPA) Filter Storage	Idaho Nuclear Technology and Engineering Center (INTEC)	Completion of activities specified in the approved WCF closure plan on 11/02/99. Substantive post-closure care requirements for the WCF are addressed under Volume 21 - HWMA/RCRA Part B Post-Closure Permit for the Waste Calcining Facility (WCF). The DEQ issued the Final WCF Post-Closure Permit with an Effective Date of 10/16/03.
Multicurie Cell (MCC)	INTEC	Administrative closure requested and granted due to the fact that the MCC has not, and will not, store or otherwise manage hazardous or mixed wastes. Interim status terminated by the DEQ on 7/20/99.
Portable Water Treatment Unit (PWTU)	TAN/WROC	Completion of activities specified in the approved PWTU closure plan. Interim status terminated by the DEQ on 7/08/99.
Certified & Segregated (C&S) Building Air-Support Building II (ASB II)	RWMC	Completion of activities specified in the approved C&S and ASB II closure plan. Interim status terminated by the DEQ on 4/16/99.

Table 1. (continued)

INTERIM STATUS UNIT NAME	LOCATION	CLOSURE JUSTIFICATION
Waste Experimental Development Facility (WEDF) Hazardous Waste Stabilization and Storage Units	Power Burst Facility (PBF)/ WROC	Completion of activities specified in the approved WEDF closure plan. Interim status terminated by the DEQ on 12/02/97.
Specific Manufacturing Capability (SMC) Waste Acid Calciner, Stabilization, and Storage Units	TAN/SMC	Completion of activities specified in the approved SMC Waste Acid Calciner Unit closure plan. Interim status terminated by the DEQ on 9/24/97.
TAN Sodium Storage Unit	TAN	Completion of activities specified in the approved TAN Sodium Storage Unit closure plan. Interim status terminated by the DEQ on 6/13/97.
Naval Ordnance Disposal Area (NODA)	North of Central Facilities Area (CFA)	DEQ determination that all hazardous wastes and residues have been removed and that the CERCLA program shall perform the final evaluation of this site in accordance with the Federal Facility Agreement and Consent Order (FFA/CO). Interim status terminated by the DEQ on 2/25/97.
TAN-607A Evaporator Unit	TAN	Completion of activities specified in the approved TAN-607A closure plan. Interim status terminated by the DEQ on 2/25/97.
SMC TAN-681 Evaporator Units	TAN	Completion of activities specified in the approved TAN-681 Evaporator Units closure plan. Interim status terminated by the DEQ on 12/20/96.
Initial Engine Test (IET) Mercury Storage Pad	North of TAN	Completion of activities specified in the approved IET Mercury Storage Unit closure plan. Interim status terminated by the DEQ on 12/20/96.
Army Reentry Vehicle Facility Site (ARVFS) Sodium/Potassium (NaK) Storage	Northeast of Naval Reactors Facility (NRF)	Completion of activities specified in the approved ARVFS NaK Storage Unit closure plan. Interim status terminated by the DEQ on 9/12/96.
Fluorinel Dissolution Process (FDP) Waste Tanks	INTEC	Completion of activities specified in the approved FDP Waste Tanks closure plan. Interim status terminated by the DEQ on 5/13/96.

Table 1. (continued)

INTERIM STATUS UNIT NAME	LOCATION	CLOSURE JUSTIFICATION
TAN-726 Chromate Water Storage Unit and the TAN-726A Treatment Unit	TAN	Completion of activities specified in the approved TAN-726/726A Chromate Water Treatment and Storage Units closure plan. Interim status terminated by the DEQ on 12/26/95.
Idaho Chemical Processing Plant (ICPP) Percolation Ponds #1 and #2	INTEC	"Clean Closed" per consent order and in compliance with all terms and conditions of the approved closure plan for the ICPP Percolation Ponds. Interim status terminated 11/29/95.
TRA-610 Lead Storage Unit	Test Reactor Area (TRA)	Completion of activities specified in the approved TRA-610 Lead Storage Unit closure plan. Interim status terminated by the DEQ on 10/27/95.

Copies of correspondence issued by the DEQ, approving completion of closure activities, are found in the "DEQ Closure Approval Letters for RCRA Interim Status Units" section of this Part A permit application.

PART A APPLICATION
REVISION LOG

INL VOLUME 1 PART A PERMIT APPLICATION
REVISION LOG

The revision log was added to provide a brief synopsis of the changes that have taken place to the Part A permit application since the submittal of the March 1995 version. This log should not be viewed as being all inclusive for correspondence between the Idaho National Laboratory (INL) contractors, the Department of Energy Idaho Operations Office (DOE-Idaho), and the Department of Environmental Quality (DEQ) with regard to the application (such as draft submittals, verbal information, etc.). However, the log does reflect the overall changes to the Part A permit application since the issuance of the March 1995 version.

REVISION NUMBER	SUBMITTAL DATE APPROVAL/DENIAL DATE	SUMMARY OF CHANGES
March 2026	- Submitted to DEQ on TBD	This submittal is primarily being completed to update the Hazardous Waste Permit Part A Form and the RCRA Subtitle C Site Identification Form. Additionally, this revision provides editorial/typographical changes as necessary.
March 2025	- Submitted to DEQ 03/25/25 - DEQ letter dated 03/31/25 – approval of the revised Part A Permit Application for the INL	This submittal is primarily being completed to update the Hazardous Waste Permit Part A Form and the RCRA Subtitle C Site Identification Form, and to update the INTEC Plot Plan and topo map. Additionally, this revision provides editorial/typographical changes as necessary.
March 2024	- Submitted to DEQ 03/28/24 - DEQ letter dated 04/01/24 – approval of the revised Part A Permit Application for the INL	This submittal was primarily completed to update the Hazardous Waste Permit Part A Form and RCRA Subtitle C Site Identification Form. The latitude and longitude coordinates were updated for the INL, and the topo map for the INTEC was updated. Additionally, this revision provided editorial/typographical changes as necessary.
March 2022	- Submitted to DEQ 03/31/22 - DEQ letter dated 04/01/22 – approval of the revised Part A Permit Application for the INL	This submittal was completed to update contractor information in all sections where necessary. Additionally, this revision provides editorial/typographical changes as necessary.
December 2021	- Submitted to DEQ 11/30/21 - DEQ letter dated 12/21/21 – approval of a Class 1* PMR including Interim Status Part A Permit Application for the INL	Transfer of the contractor operational control from Fluor Idaho, LLC, to Idaho Environmental Coalition (IEC), LLC, with an effective transfer date of 01/01/2022.

REVISION NUMBER	SUBMITTAL DATE APPROVAL/DENIAL DATE	SUMMARY OF CHANGES
March 2021	- Submitted to DEQ 03/29/21 - DEQ letter dated 04/02/21 – approval of the revised Part A Permit Application for the INL	Update the Environmental Protection Agency (EPA) Part A Forms (OMB#: 2050-0024) – RCRA Subtitle C Site Identification Form and the Hazardous Waste Permit Part A Form. Additionally, this revision provides editorial/typographical changes as necessary for reader comprehension.
March 2018	- Submitted to the DEQ March 2018 - DEQ letter dated March 22, 2018 – approval of the revised Part A Permit Application for the INL	This certified submittal is primarily being completed to update the Environmental Protection Agency (EPA) Part A Forms (OMB#: 2050-0024) – RCRA Subtitle C Site Identification Form and the Hazardous Waste Permit Part A Form (expires 05/31/2020). Additionally, this revision provides an updated topographic map and updated facility drawings, and editorial/typographical changes as necessary.
June 1, 2016	- Submitted to the DEQ on 04/20/2016 - DEQ letter dated 04/28/2016 – approval of a Class 1 PMR including Interim Status Part A Permit Application for the INL	This certified submittal was to allow for the transfer of the contractor operational control from CH2M•WG Idaho, LLC (CWI) to Fluor Idaho, with an effective transfer date of 06/01/2016.
March 2015	- Submitted to the DEQ on 03/25/2015 - DEQ letter dated 04/02/2015 – approval of the revised Part A Permit Application for the INL	This certified submittal is primarily being completed to update the Environmental Protection Agency (EPA) Part A Forms (OMB#: 2050-0024) – RCRA Subtitle C Site Identification Form and the Hazardous Waste Permit Information Form – revision date: January 2015. Additionally, this revision provides an updated topographic map and updated facility drawings, and editorial/typographical changes as necessary.
March 2012	- Submitted to the DEQ on 03/15/2012 - DEQ letter dated 04/06/2012 – approval of revised Part A Permit Application for the INL	This certified submittal is being completed to update the Environmental Protection Agency (EPA) Part A Forms (OMB#: 2050-0024) – RCRA Subtitle C Site Identification Form and the Hazardous Waste Permit Information Form.
July 2010	- Submitted to the DEQ on 07/08/2010 - DEQ letter dated 08/04/2010 – approval of the revised Part A Permit Application	This certified submittal updates/incorporates all changes to Volume 1, from September 2009 through June 2010.
September 2009	- Submitted to the DEQ on 09/30/09 - DEQ letter dated 10/23/09 – approval of the revised Part A Permit Application	This certified submittal updates/incorporates all changes to Volume 1, from February 2007 through August 2009.

REVISION NUMBER	SUBMITTAL DATE APPROVAL/DENIAL DATE	SUMMARY OF CHANGES
March 2007	- Submitted to the DEQ on 03/01/07 - DEQ letter dated 04/06/07 – approval of the revised Part A Permit Application	This certified submittal updates/incorporates all changes to Volume 1, from August 2006 through February 2007.
August 2006	- Submitted to the DEQ on 9/07/06 - DEQ letter dated 10/25/06 – letter constitutes final administrative disposition of the INTEC New Tank Farm	This certified submittal removes the "INTEC New Tank Farm Tanks (proposed)" from the Part A Permit Application per the request of the DEQ (DEQ request letter dated 7/7/06).
March 2006	- Submitted to the DEQ on 3/29/06	This certified submittal updates/incorporates all changes to Volume 1, from 5/01/05 through 2/01/06.
May 2005	- Submitted to the DEQ on 4/19/05 - DEQ letter dated 4/26/05 – submittal provides all requisite information	This certified submittal was to allow for the transfer of operational control from Bechtel BWXT Idaho, LLC (BBWI) to CH2M•WG Idaho, LLC (CWI), with an effective transfer date of 5/01/05.
March 2005	- Submitted to the DEQ on 3/29/05 - DEQ letter dated 4/24/05 – The submittal provides all requisite information	This certified submittal updates/incorporates all changes to Volume 1, from 8/01/04 through 2/28/05. NOTE: The major changes to this revision of the Part A Permit Application are the removal of all interim status units that have received closure approval from the DEQ and the removal of all interim status units that have now been granted a HWMA/RCRA Part B Permit by the DEQ.
September 2004	- Submitted to the DEQ on 09/30/04 - DEQ letter dated 12/01/2005 [sic] – submittal provides all requisite information	This certified submittal updates/incorporates all changes to Volume 1, from 08/01/03 through 08/01/04. NOTE: The major change to this revision of the Part A Permit Application is the removal of all interim status units that have received closure approval from the DEQ and removal of units that previously had interim status and have now been granted a HWMA/RCRA Part B permit.
September 2003	- Submitted to the DEQ on 10/02/03 - DEQ letter dated 2/06/04 – submittal provides all requisite information	This certified submittal updated/incorporated all changes to Volume 1, from 9/01/02 through 08/01/03. NOTE: The major change to this revision of the Part A Permit Application is the incorporation of the revised EPA Form 8700-23: Subtitle C Site Identification Form (OMB #: 2050-0175), and the Hazardous Waste Permit Information Form (OMB #: 2050-0034).

REVISION NUMBER	SUBMITTAL DATE APPROVAL/DENIAL DATE	SUMMARY OF CHANGES
November 2002	- Submitted to DEQ on 11/22/02 - DEQ letter 12/17/02 – submittal provides all requisite information	This certified submittal removed three photographs which had been marked as "Official Use Only". Removal of this information was done to allow the State to provide unrestricted public release of this permit application.
September 2002	- Submitted to DEQ on 9/27/02 - DEQ letter 10/29/02 – submittal provides all requisite information	This certified submittal updated/incorporated all changes to Volume 1, from 9/01/01 - 08/01/02. **NOTE:** The major change to this revision of the Part A permit application was the removal of INTEC interim status units that received a Part B Permit (Volume 18 – May 15, 2002).
September 2001	- Submitted to DEQ on 9/27/01 - Approved by DEQ on 10/25/01.	This certified submittal updated/incorporated all changes to Volume 1 (from 3/01/01 - 9/01/01). **NOTE:** The major change to this revision of the Part A permit application was the removal of all information pertaining to the Radioactive Waste Management Complex (RWMC) interim status units. Effective June 4, 2001, these units were transferred to the operational control of BNFL Inc. Information on these units may be found in the HWMA/RCRA Part A Permit Application for the INEEL, Pads TSA-1/TSA-R and TSA-2 and TSA-RMF at the Transuranic Storage Area. Volume 1a - BNFL Inc.
March 2001	- Submitted to DEQ on 3/30/01 - Approved by DEQ on 4/25/01	This certified submittal updated/incorporated all changes to Volume 1 (from 1/01/00 to 3/01/01).
Draft January 2001	- Information not transmitted to DEQ - for internal review only	Complete revision/update to the RCRA Part A permit application. This draft updated/incorporated all changes to Volume 1 (from 1/01/00 to 1/01/01).
November 2, 2000	- Submitted to DEQ on 11/02/00 - Denied by DEQ on 12/04/00 - Resubmitted to DEQ on 1/31/01 - Approved by DEQ on 4/23/01	This submittal transmitted an INEEL position paper regarding the DEQ's establishment of an upper bound temperature limit on Process Equipment Waste Evaporator (PEWE) operations at the Idaho Nuclear Technology and Engineering Center (INTEC) as an interim status permit condition. The resubmittal transmitted additional information requested by the DEQ on 12/04/00.
September 2000	- Submitted to DEQ on 10/24/00 - Approved by DEQ on 11/09/00	This certified submittal requested a change in the treatment capacity (T01) for the PEWE Feed/Storage and Treatment Tank VES-WL-132, located at the INTEC.

REVISION NUMBER	SUBMITTAL DATE APPROVAL/DENIAL DATE	SUMMARY OF CHANGES
July 13, 2000	- Submitted to DEQ on 7/13/00 - Approved by DEQ on 8/08/00	This submittal transmitted an editorial correction/page change out to correct process description information for the New Waste Calcining Facility (NWCF) High Efficiency Particulate Air (HEPA) Filter Storage Unit, located at the INTEC.
April 2000	- Submitted to DEQ on 6/21/00 - Approved by DEQ on 8/24/00	This certified submittal requested changes to enhance the operational flexibility of the PEWE system (tanks VES-WL-101 and VES-WL-111), located at the INTEC. The DEQ approved this submittal subject to specific conditions outlined in their approval letter. (See November 2, 2000, submittal for additional information.)
January 24, 2000	- Submitted to DEQ on 1/24/00 - Approved by DEQ on 2/03/00	This certified submittal requested changes to the Waste Experimental Reduction Facility (WERF) Stabilization System process (installation of the ROSS Double Planetary Mixer to replace the hand-held mixer) located at the Waste Reduction Operations Complex (WROC).
Final Rev. January 2000	- Submittal to DEQ on 1/24/00 - Approved by DEQ on 4/3/00	This certified revision updated the Hazardous Waste Management Act (HWMA)/Resource Conservation and Recovery Act (RCRA) Part A Permit Application for the INEEL to reflect the status of all Bechtel BWXT Idaho, LLC (BBWI) interim status units through 12/31/99.
Draft December 1999 Final January 24, 2000	- Submitted to DEQ on 12/22/99 - Final certified submittal transmitted to DEQ on 1/24/00 - Approved by the DEQ on 2/03/00	This submittal was to allow for changes to the WERF Stabilization process (T04) at the WROC. The request was for the addition of Ross Double Planetary Mixer and other components of a stabilization system. (See January 24, 2000, submittal for additional information.)
Draft Rev. 24	- Submitted to DEQ on 11/14/99 - Denied by DEQ*	This draft requested the addition of EPA HWN U134 to the WERF Incinerator Unit. (The U134 is only to be found as a contaminant to the waste stream, not pure product for incineration.) *DEQ denied request - pending comment resolution and certification of the document. The final certified document was submitted under Final Rev. 22. (See January 12, 1999, submittal for additional information.)

REVISION NUMBER	SUBMITTAL DATE APPROVAL/DENIAL DATE	SUMMARY OF CHANGES
Final Rev. 23	See final certified request - Submitted to DEQ on 6/21/00 - Approved by DEQ on 8/24/00	This was a revised submittal of draft Rev.19 Part A change request for the INTEC. This submittal requested changes for the PEW tanks VES-WL-101 and VES-WL-111. BBWI received informal comments from the DEQ on final draft revision of this information.
Final Rev. 22	- Final certified request submitted to DEQ on 11/22/99 - Certified request approved by DEQ on 12/17/99	Final certified revision to add Environmental Protection Agency (EPA) Hazardous Waste Number (HWN) U134 to the WERF Incinerator Unit at the WROC. (The U134 HWN is acceptable only as a contaminant in the waste stream).
Draft *Rev. 22*	- Draft request submitted to DEQ on 10/28/99 - Draft request denied by DEQ on 12/15/99*	Request for the WROC. Increase in container storage capacity for the Mixed Waste Storage Facility (MWSF) Portable Storage Units (PSUs) and the addition of the WERF Waste Storage Building (WWSB) PSUs. BBWI received draft comments from the DEQ on 11/18/99. *DEQ denied request - pending comment resolution and certification of the document. BBWI did not submit a final certified request due to the fact that the DEQ issued a HWMA/RCRA Part B Permit for the MWSF PSUs - effective January 27, 2000.
Draft *Rev. 9/99*	- Information not transmitted to DEQ - for internal review only	Complete revision/update to the RCRA Part A permit application - included all DEQ-approved changes/ revisions since the issuance of the March 1995 version of the permit. This document was finalized, certified and transmitted to the DEQ as Rev. January 2000.
Not Applicable (N/A)	- Final certified request submitted to DEQ on 8/17/99 - Certified request approved by DEQ on 9/16/99	Change in the name of the operating contractor at the INEEL from Lockheed Martin Idaho Technologies Company (LMITCO) to Bechtel BWXT Idaho, LLC (BBWI) - effective 10/01/99.
N/A	- Request submitted to DEQ on 4/07/99 - Request approved by DEQ on 5/18/99	Continued operations of D-Cell interim status container storage unit approved until 12/31/03.
Final Rev. 21	- Final request with certification submitted to DEQ on 1/13/99 - Final certified request approved by DEQ on 1/26/99	Request to redistribute container storage capacity (S01) at the WROC. Redistribution 10,000 gallons of capacity from the MWSF to the MWSF-PSUs.

REVISION NUMBER	SUBMITTAL DATE APPROVAL/DENIAL DATE	SUMMARY OF CHANGES
Draft & Final Rev. 20	- Final draft request submitted to DEQ - 2/99 - Final draft approved by DEQ - 2/25/99 - Final certification submitted to DEQ - 3/18/99 - Final certification approved by DEQ - 3/24/99	Request for increase in container storage capacity (S01) from 134,640 gallons to 2,244,156 gallons at INTEC Radioactive Mixed Waste Staging Facility (RMWSF)-CPP-1617.
Draft *Rev. 19*	- Draft revision request submitted to DEQ - 5/14/99 - Draft denied by DEQ - 7/06/99	Numerous INTEC facility changes requested for the PEWE, Liquid Effluent Treatment and Disposal (LET&D) facility, Tank Farm, and CPP-604 Tank Farm Systems. After denial by DEQ, BBWI determined that the request would be spilt up into several smaller requests, based on priority, and each would be resubmitted as applicable. The final certified request(s) were split into smaller, detailed requests, as necessary, dependent on operational priority.
18	Rev. 2/98 - Submitted to DEQ - 4/01/98 - Approved by DEQ - 4/13/98*	Removal of D002 EPA HWN from INTEC Westside Holdup Tank System (VES-WL-103, VES-WL-104, VES-WL-105), as required by 10/07/92 Consent Order. *DEQ Compliance Bureau approval
17	Final Rev. 9/97 - Submitted to DEQ - 9/23/97 - Approved by DEQ - 10/02/97	Request for interim status for mixed waste repackaging at WERF (PER-609, Room B102) and MWSF (Room 102) - Treatment (T04) @ 5,000 gallons/day each.
16	Final Rev. 6/97 - Submitted to DEQ - 8/14/97 - Approved by DEQ - 8/22/97* - Approved by DEQ - 5/19/99**	Request for interim status for CPP-603 storage tank VES-SFE-106, as required by 1/14/97 Notice of Violation/Consent Order (NOV/CO). Tank storage (S02) @ 25,000 gallons and tank treatment (T01) @ 25,000 gallons/day. *DEQ approved S02 ** DEQ approved T01

REVISION NUMBER	SUBMITTAL DATE APPROVAL/DENIAL DATE	SUMMARY OF CHANGES
15	Rev. 7/96 - Submitted to DEQ - 8/09/96 - Approved by DEQ - 9/19/96* - Denied by DEQ - 9/19/96**	Requested Idaho Chemical Processing Plant (ICPP) Part A changes - interim status for hazardous waste storage tanks: CPP-603 Storage Tank, LET&D Storage Tanks, PEWE Feed/Storage & Treatment Tanks, PEWE Condensate Feed Tank, and increased throughput for NWCF-Evaporator Tank System (ETS). Requested at Test Area North (TAN) - Hazardous Waste Storage Area (HWSA) at Specific Manufacturing Capability (SMC) - EPA HWN D003. *DEQ Approved - the increase of the process capacity for the NWCF-ETS **DEQ Denied - D003 for TAN HWSA as “no longer viable”; interim status request for CPP-603 tank
14	Rev. 11/95 - Submitted to DEQ on 12/05/95 - Denied by DEQ on 12/21/95 - Resubmittal of NWCF information to DEQ on 2/01/96* - NWCF resubmittal request approved by DEQ on 3/07/96	SMC Calciner at TAN request for Interim Status for the addition of thermal treatment (X03), container treatment (T04), tank storage (S02), and container storage (S01). Requested changes for the ICPP NWCF Calciner and the NWCF Storage and Treatment Tanks. *Response to denial for NWCF units resubmitted to DEQ 2/01/96.
13- Mod 1	- Submitted to DEQ on 6/22/95	This submittal was for the incorporation of the DEQ’s requested revisions to the March 1995 Part A permit application submittal. The revisions included changes to specific unit measurements when used with specific process codes, changes in process codes that were incorrect, inclusion of information that had been omitted in the original submittal.

REVISION NUMBER	SUBMITTAL DATE APPROVAL/DENIAL DATE	SUMMARY OF CHANGES
13	Rev. 3/95 - Submitted to DEQ on 3/27/95 - Denied by DEQ on 5/23/95	This revision was requested by the DEQ-Hazardous Waste Permitting Bureau (HWPB), 1/24/95. This major revision incorporated outstanding changes to the Idaho National Engineering Laboratory (INEL) Part A permit application since the issuance of the September 1990 revision (Rev. #10) of the INEL Part A permit application. This revision included DOE-ID contractor name change to Lockheed Idaho Technologies Company (LITCO); changes in capacity, annual waste quantity, unit names and process codes; the addition of hazardous waste numbers approved via letter and the correction of hazardous waste numbers that are no longer valid; justification for the addition of interim status units; and justification for the removal of interim status units.

DEQ RESPONSE TO PART A CHANGE REQUESTS

DEQ Correspondence Regarding Part A Changes

CONTENTS

Date of Letter	Subject of Letter
TBD	Response to HWMA/RCRA Part A Permit Application for the INL, Volume 1 – March 2026 revision.
March 31, 2025	Response to HWMA/RCRA Part A Permit Application for the INL, Volume 1 – March 2025 revision. DEQ approves the revised Part A Permit Application.
April 1, 2024	Response to HWMA/RCRA Part A Permit Application for the INL, Volume 1 – March 2024 revision. DEQ approves the revised Part A Permit Application.
March 9, 2023	Response to HWMA/RCRA Part A Permit Application for the INL, Volume 1 – Update for 2023. DEQ concurs with the determination that an annual update to the Part A Permit Application is not required at this time.
April 1, 2022	Response to HWMA/RCRA Part A Permit Application for the INL, Volume 1 – March 2022 Revision. DEQ approves the revised Part A Permit Application.
December 21, 2021	Approval of a Class 1* PMR for Operational Transfer of Multiple HWMA/RCRA Partial Permits including Interim Status Part A Permit Application on the INL
April 2, 2021	Response to HWMA/RCRA Part A Permit Application for the INL, Volume 1 – March 2021 Revision. DEQ approves the revised Part A Permit Application.
March 12, 2020	Response to HWMA/RCRA Part A Permit Application for the INL, Volume 1 – Update for 2020. DEQ concurs with the determination that an annual update to the Part A Permit Application is not required at this time.
February 2, 2019	Response to HWMA/RCRA Part A Permit Application for the INL, Volume 1 – Update for 2019. DEQ concurs with the determination that an annual update to the Part A Permit Application is not required at this time.
March 22, 2018	Response to HWMA/RCRA Part A Permit Application for the INL, Volume 1 – March 2018 Revision. DEQ approves the revised Part A Permit Application.
March 9, 2017	Response to HWMA/RCRA Part A Permit Application for the INL, Volume 1 – Update for 2017. DEQ concurs with the determination that an annual update to the Part A Permit Application is not required at this time.
April 28, 2016	Approval of a Class 1* PMR to designate Fluor Idaho, LLC as the Contractor Operator for several HMWA/RCRA Partial Permits on the INL and operator change for the Interim Status Part A Permit Application for the INL (Volume 1)
March 2, 2016	Response to HWMA/RCRA Part A Permit Application for the INL, Volume 1 – Update for 2016. DEQ concurs with the determination that an annual update to the Part A Permit Application is not required at this time.

Date of Letter	Subject of Letter
April 2, 2015	Response to HWMA/RCRA Part A Permit Application for the INL, Volume 1 – March 2015 Revision. DEQ approves the revised Part A Permit Application.
February 3, 2014	Response to HWMA/RCRA Part A Permit Application for the INL, Volume 1 – Update for 2014. DEQ concurs with the determination that an annual update to the Part A Permit Application is not required at this time.
May 9, 2013	Response to HWMA/RCRA Part A Permit Application for the INL, Volume 1 – Update for 2013. DEQ concurs with the determination that an annual update to the Part A Permit Application is not required at this time.
April 6, 2012	Clean Copy Pages Received for Approved Modifications to the INL HWMA/RCRA Part A Permit Application. The submittal appears to be in order and is satisfactory.
August 4, 2010	Interim Status Part A Permit Application, Volume 1, July 2010 Revision. Based upon review of the submittal, DEQ acknowledges removal of the eleven Tank Farm Facility Tanks (VES-WM-103 through VES-WM-106 and VES-WM-180 through VES-WM-186) and approves the revised Interim Status Part A Permit Application, Volume 1.
October 23, 2009	Interim Status Part A Permit Application, Volume 1, September 2009 Revision. Based upon review of the submittal, DEQ acknowledges removal of the CPP-640 Headend Storage Tank System and the CPP-603 Storage and Treatment Tank (VES-SFE-106) from Volume 1 and approves the revised Interim Status Part A Permit Application, Volume 1.
October 5, 2009	Idaho Department of Environmental Quality (DEQ) approved the certification of closure for the TFF tanks VES-WM-180 through VES-WM-186 and VES-WM-103 through VES-WM-106, in accordance with IDAPA 58.01.05.009.
May 12, 2009	DEQ determined that the closure certification for the CPP-603 VES-SFE-106 Storage Tank met all the requirements of IDAPA 58.01.05.009 and therefore closure is approved.
June 12, 2008	DEQ determined that the closure certification for the CPP-640 Headend Storage Tank System met all the requirements of IDAPA 58.01.05.009 and therefore closure is approved.
October 25, 2006	(DEQ) acknowledges removal of INTEC New Tank Farm Unit from interim status and the letter constitutes final administrative disposition of the INTEC New Tank Farm.
October 9, 2006	DEQ acting under the authority of the Hazardous Waste Management Act of 1983 (HWMA), as amended, approves the Calcined Solids Storage Facility (CSSF) Hazardous Waste Storage Permit – with an effective date of November 9, 2006.

Date of Letter	Subject of Letter
July 7, 2006	DEQ request for removal of the "INTEC New Tank Farm Tanks (proposed)" from the Volume 1 Part A Permit Application for the INL.
December 21, 2005	DEQ approval of the Class 3 PMR to add the Evaporator Tanks System to the Hazardous Waste Management Act (HWMA) Volume 14 Partial Permit for the Idaho Nuclear Technology and Engineering Center (INTEC) Liquid Waste Management System (ILWMS) on the Idaho National Laboratory – effective date of January 23, 2006.
April 26, 2005	DEQ review of the May 2005 revision of the Volume 1 – Part A Permit Application. The revised Part A Application is approved.
April 24, 2005	DEQ review of the March 2005 revision of the Volume 1 – Part A Permit Application. Based on DEQ's review, the Department of Energy (DOE-Idaho) provided the requisite information.
December 1, 2005 [sic]	DEQ review of the September 2004 revision of the Volume 1 – Part A Permit Application. Based on DEQ's review, the Department of Energy (DOE-Idaho) provided the requisite information.
September 16, 2004	DEQ approval of the Hazardous Waste Management Act (HWMA) Volume 14 Partial Permit for the Idaho Nuclear Technology and Engineering Center (INTEC) Liquid Waste Management System (ILWMS) on the Idaho National Engineering Laboratory (effective date of permit 10/18/04)
February 6, 2004	DEQ review of the September 2003 revision to the HWMA/Resource Conservation and Recovery Act (RCRA) Part A Permit Application (Volume 1). Based on DEQ's review, the DOE-Idaho has provided the requisite information.
September 3, 2003	DEQ approval of a Class 3 Permit Modification Request (PMR) to modify the Volume 18 HWMA/RCRA Partial Permit - to permit the Radioactive Mixed Waste Staging Facility [(RMWSF) - CPP-1617] and the Hazardous Chemical and Radioactive Waste Storage Facility [(HWRWSF) - CPP-1619] as container storage units (S01).
December 17, 2002	DEQ noted two minor omissions in the November 2002 submittal of the Part A Permit Application (Volume 1). However, based on DEQ's review, the submittal provided the requisite information.
October 29, 2002	DEQ review of the September 2002 revision to the HWMA/RCRA Part A Permit Application (Volume 1). Based on DEQ's review, the DOE-Idaho has provided the requisite information.
May 15, 2002	DEQ Notice of Decision and Order to Affirm the Hazardous Waste Treatment and Storage Partial Permit for Units at Idaho National Engineering and Environmental Laboratory (INEEL) Bldgs. CPP-659/1659.

Date of Letter	Subject of Letter
October 25, 2001	DEQ approval of the Part A Permit Application, Volume 1, Book 1, Rev. September 2001 for the INEEL, Environmental Protection Agency (EPA) ID No. ID4890008952.
April 25, 2001	DEQ approval of the Part A Permit Application, Volume 1, Book 1, Rev. March 2001 for the INEEL, EPA ID No. ID4890008952.
April 23, 2001	DEQ Approval of the Process Equipment Waste Evaporator (PEWE) Operations at the Idaho Nuclear Technology and Engineering Center (INTEC), INEEL, EPA ID No. ID4890008952.
December 4, 2000	DEQ review and request for additional information regarding the INEEL position paper on the Operational Temperature Limit Imposed on PEWE Operations at the INTEC.
November 14, 2000	DEQ approval of the transfer of operational control of the Radioactive Waste Management Complex (RWMC) Transuranic Storage Area (TSA) interim status units (Pads TSA-1/TSA-R, TSA-2, and TSA-Retrieval Modification Facility (RMF) from Bechtel BWXT Idaho, LLC (BBWI) to BNFL Inc. **NOTE:** The transfer of operational control from BBWI to BNFL did not go into effect until June 4, 2001.
November 9, 2000	DEQ approval of the Part A Permit application modification request for the CPP-604 PEWE Feed/Storage & Treatment Tank VES-WL-132, for the increase in treatment capacity (T01) from 7,000 gallons/day to 28,000 gallons/day.
October 3, 2000	DEQ permit denial of the HWMA permit for the incinerator component of the Waste Experimental Reduction Facility (WERF) on the INEEL. WERF incinerator waste management operations must cease - effective November 2, 2000.
August 24, 2000	DEQ approval (subject to specified conditions) of the Part A modification request that requested changes to enhance the operational flexibility of the PEWE system (tanks VES-WL-101 and VES-WL-111), located at the INTEC.
August 8, 2000	DEQ approval of the request for editorial correction to process description information for the New Waste Calciner Facility (NWCF) high efficiency particulate air (HEPA) filter storage unit located at the INTEC.
April 3, 2000	DEQ approval of the HWMA/RCRA Part A Permit Application for the INEEL, Volume 1, BBWI, Revision January 2000.
March 2, 2000	DEQ approval/concurrence of sorting and segregating activities to take place at CPP-1617, based on a DOE-Idaho white paper submitted to the DEQ on February 18, 2000.
February 14, 2000	DEQ transmittal of the HWMA/RCRA Part B Partial-Permit for the Test Area North (TAN) on the INEEL.

Date of Letter	Subject of Letter
February 14, 2000	DEQ transmittal of the HWMA/RCRA Part B Partial-Permit for the WERF/Waste Reduction Operations Complex (WROC) on the INEEL.
February 3, 2000	DEQ approval of the WERF Stabilization Process at the WROC located on the INEEL.
December 17, 1999	DEQ approval of the Part A Modification Request to Add EPA Hazardous Waste Number (HWN) U134 to the WERF Incinerator (Final Revision Number 22).
December 15, 1999	DEQ questions/comments regarding the RCRA Draft Justification Part A Modification for the WROC Repackage Portable Storage Units (RPSUs).
July 6, 1999	DEQ request to revise the May 14, 1999, draft submittal of the Justification for the Part A Modification Requesting Interim Status Changes INTEC.
May 19, 1999	DEQ approval of tank treatment (T01) for the CPP-603 storage tank, VES-SFE-106, located at the INTEC.
May 18, 1999	DEQ approval of interim status request for container storage (S01) in the D-Cell, located at the INTEC.
February 25, 1999	DEQ approval of the interim status request for container storage (S01) capacity increase at the RMWSF - CPP-1617, located at the INTEC.
January 26, 1999	DEQ approval of interim status request for operational changes in container storage (S01) units at the WROC.
April 13, 1998	DEQ approval of interim status request to remove EPA HWN D002 from the Idaho Chemical Processing Plant (ICPP) Westside Holdup Tank (WHT) No. 105.
October 2, 1997	DEQ approval of interim status request for mixed waste repackaging (T04) at the WERF and the Mixed Waste Storage Facility (MWSF), located at the WROC.
August 22, 1997	DEQ approval of interim status request for tank storage (S02) for hazardous waste storage tank VES-SFE-106, located at ICPP.
May 20, 1997	DEQ request that DOE-Idaho submit three copies of the required revised Part A pages and the Owner/Operator certification for the interim status request for storage (S02) and treatment (T01) in tank VES-SFE-106, located at the ICPP.
December 3, 1996	DEQ denial of interim status request for storage (S02) and treatment (T01) in tank VES-SFE-106, located at the ICPP.

Date of Letter	Subject of Letter
September 19, 1996	DEQ approval of interim status request to increase the process capacity of the NWCF Evaporator Tank System (ETS). DEQ denial of request for interim status for storage (S02) and treatment (T01) in tank VES-SFE-106 and denial of interim status request to add the EPA HWN D003 to the Specific Manufacturing Capability (SMC) Hazardous Waste Storage Area. DEQ approval of name change request.
September 12, 1996	DEQ approval of interim status request to increase the process capacity of the NWCF ETS and notification of concerns associated with the other requested Part A modifications from the August 9, 1996, submittal.
May 8, 1996	DEQ approval of interim status request to conduct tank treatment using aluminum nitrate or nitric acid (T01) in four NWCF tanks (VES-NCC-119, -122, -123, -129), one PEWE feed tank (VES-WL-133), and allow for tank treatment using aluminum nitrate for the WG/WH tanks (WG-100, -101, WH-100, -101), located at the ICPP.
March 7, 1996	DEQ approval of interim status request to increase the estimated annual waste quantities and process design capacities for the NWCF calciner and associated storage and treatment tanks, located at the ICPP.
January 16, 1996	DEQ approval of interim status request to add the SMC units to the RCRA Part A Permit Application for the Idaho National Engineering Laboratory (INEL). Additionally, the DEQ required that the DOE-Idaho submit within 45 days, a closure plan for the SMC units.
December 21, 1995	DEQ list of deficiencies for the Part A permit application (received by DEQ December 5, 1995) for requested interim status revisions for the NWCF, located at the ICPP, and for requested interim status revisions for the SMC Calciner, located at the TAN.
May 23, 1995	DEQ list of additional items requiring revision with regard to the modified RCRA Part A permit, dated March 27, 1995, for the INEL.
January 24, 1995	DEQ review addressing all of the Part A permit modification requests for hazardous and/or mixed waste management units at the INEL through January 1, 1995. Enclosure 1 identifies all approved requests. Enclosure 2 identifies all denied requests. Requirement that DOE submit a complete revised Part A Permit Application reflecting these changes within 60 days of receipt of this letter.

Note: The primary purpose of this section is to provide copies of the DEQ's correspondence with regard to interim status change requests since the March 1995 version of the Part A permit application. This section should not be viewed as being all inclusive of the DEQ's correspondence between the INL contractors and the DOE-Idaho with regard to the interim

status change requests.

1410 N Hilton Street
Boise, ID 83706 • (208) 373-0502

Brad Little, Governor
Jess Byrne, Director

March 31, 2025

Nicole Hernandez
U.S. Department of Energy
Idaho Operations Office
1955 Fremont Ave
Idaho Falls, Idaho 83415
hernannk@id.doe.gov

Subject: Response to the Update of the Hazardous Waste Management Act (HWMA) Part A Permit Application for the Idaho National Laboratory (INL), Volume 1 – Idaho Nuclear Technology and Engineering Center (INTEC), Book 1 of 1, Revision: March 2025, EPA ID No. ID4890008952

Dear Ms. Hernandez:

The Idaho Department of Environmental Quality (DEQ) received the 2025 Update to the HWMA Part A Permit Application for INL, Volume 1, on March 25, 2025. The revisions include:

- Updating the information on the Hazardous Waste Permit Part A Form and the Resource Conservation and Recovery Act Subtitle C Site Identification Form.
- Provide updated DEQ correspondence documentation.
- Updated INTEC Plot Plan and topographic map.
- Editorial/typographical changes as necessary.

After review, DEQ approves the revised HWMA Part A Permit Application for INL, Volume 1.

If you have any questions, please contact Andrew Ramsey at (208) 373-0163 or andrew.ramsey@deq.idaho.gov.

Sincerely,

Daryl Sawyer Digitally signed by Daryl Sawyer
Date: 2025.03.31 08:32:31 -06'00'

Daryl Sawyer
Hazardous Waste Permit Supervisor
Waste Management and Remediation Division

c: Scott Reno, IEC
Tauna Butler, DOE
Mary Winsor, EPA Region 10
Jeremiah Thomas, DEQ STO
Rensay Owen DEQ IFRO
2025BCQ132

CCN 332425

1410 N Hilton Street
Boise, ID 83706 • (208) 373-0502

Brad Little, Governor
Jess Byrne, Director

April 01, 2024

Nicole Hernandez
U.S. Department of Energy
Idaho Operations Office
1955 Fremont Avenue
Idaho Falls, ID 83415
hernannk@id.doe.gov

Subject: 2024 Update to the Hazardous Waste Management Act/Resource Conservation and Recovery Act (HWMA/RCRA) Part A Permit Application for the Idaho National Laboratory (INL), Volume 1 – Idaho Nuclear Technology and Engineering Center (INTEC), Book 1 of 1, Revision: March 2024, EPA ID No. ID4890008952

Dear Ms. Hernandez,

The Idaho Department of Environmental Quality (DEQ) received the 2024 Update to the HWMA/RCRA Part A Permit Application for INL, Volume 1, on March 28, 2024. The revisions include:

- Latitude and longitude coordinates for the Idaho National Laboratory
- Removes references to the Transuranic Storage Area Interim Status Unit at the Advanced Mixed Waste Treatment Project (AMWTP)
- Documents additional DEQ correspondence
- Provides updated maps for INTEC
- Editorial/administrative changes

After review, DEQ approves the revised HWMA/RCRA Part A Permit Application for the INL, Volume 1.

If you have any questions, please contact Madeline Wong at Madeline.Wong@deq.idaho.gov.

Sincerely,

Daryl Sawyer

Digitally signed by Daryl Sawyer
Date: 2024.04.01 09:05:08 -06'00'

Daryl Sawyer
Hazardous Waste Permit Supervisor
Waste Management and Remediation Division

c: Scott Reno, IEC
Tauna Butler, DOE
Mary Winsor, EPA Region 10
Caroline Moores, DEQ STO
Rensay Owen, DEQ IFRO
2024BCQ129

CCN 330511

1410 N Hilton Street
Boise, ID 83706 • (208) 373-0502

Brad Little, Governor
Jess Byrne, Director

March 9, 2023

Nicole Hernandez
U.S. Department of Energy
Idaho Operations Office
1955 Fremont Avenue
Idaho Falls, ID 83415
hernannk@id.doe.gov

Subject: 2023 Update to the Hazardous Waste Management Act/Resource Conservation and Recovery Act Part A Permit Application for the Idaho National Laboratory, Volume 1 – Idaho Nuclear Technology and Engineering Center, Book 1 of 1, Revision: March 2022, EPA ID No. ID4890008952

Dear Ms. Hernandez:

The Idaho Department of Environmental Quality (DEQ) received the 2023 Update to the Hazardous Waste Management Act/Resource Conservation and Recovery Act Part A Permit Application for INL, Volume 1, on March 6, 2023. DEQ concurs with the determination made by Idaho Environmental Coalition, LLC (IEC) on the behalf of all INL contractors and the Department of Energy, Idaho Operations Office, that an annual update to the Part A Permit Application is not required at this time.

If you have any questions, please contact Madeline Renfrow at (208) 373-0208.

Sincerely,

Daryl Sawyer Digitally signed by Daryl Sawyer
Date: 2023.03.09 09:52:24 -07'00'

Daryl Sawyer
Hazardous Waste Permit Supervisor
Waste Management and Remediation Division

ec: Mary Winsor, EPA Region 10
Scott Reno, IEC
Rensay Owen, DEQ IFRO
Kerry Neil, DEQ STO
2023BCQ56

CCN 328805

STATE OF IDAHO
DEPARTMENT OF
ENVIRONMENTAL QUALITY

1410 N Hilton Street, Boise, ID 83706
(208) 373-0502

Brad Little, Governor
Jess Byrne, Director

April 01, 2022

Nicole Hernandez
U. S. Department of Energy
Idaho Operations Office
1955 Fremont Avenue
Idaho Falls, ID 83415

Subject: Response to Revised Hazardous Waste Management Act (HWMA)/Resource Conservation and Recovery Act (RCRA) Part A Permit Application for the Idaho National Laboratory (INL), Volume 1 — Update for 2022, EPA ID# ID4890008952

Ms. Hernandez:

The Idaho Department of Environmental Quality (DEQ) received the 2022 update for the Part A Permit Application for the INL, Volume 1, on March 31, 2022. The primary purpose of this revision was to update the operating contractor information in Section 2 of the Part A Permit Application Summary. This revision also includes editorial and administrative changes and the updated Idaho Department of Environmental Quality correspondence.

After review, DEQ approves the revised Part A Permit Application, Volume 1.

If you have any questions, please contact Madeline Renfrow at (208)373-0208.

Sincerely,

Natalie Walker

Natalie Walker
Hazardous Waste Bureau Chief
Waste Management and Remediation Division

NW/MR

ec: Margaret Olson, EPA Region 10
Scott Reno, IEC
Rensay Owen, DEQ IFRO

CCN 324934

STATE OF IDAHO
DEPARTMENT OF
ENVIRONMENTAL QUALITY

1410 North Hilton • Boise, Idaho 83706 • (208) 373-0502
www.deq.idaho.gov

Governor Brad Little
Director John H. Tippets

March 12, 2020

Nicole Hernandez
U. S. Department of Energy
Idaho Operations Office
1955 Fremont Avenue
Idaho Falls, ID 83415

Subject: Response to 2020 Updates for Volumes 1 & 3 Hazardous Waste Management Act (HWMA)/Resource Conservation and Recovery Act (RCRA) Permit Applications for the Idaho National Laboratory (INL), EPA ID# ID4890008952

Ms. Hernandez:

The Idaho Department of Environmental Quality (DEQ) received the 2020 updates for the Part A Permit Application (Volume 1) and the Part B Application for General Information for the INL Waste Management Units (Volume 3), on March 5, 2020. DEQ concurs with the determination made by Fluor Idaho, LLC, on the behalf of all INL contractors and the Department of Energy, Idaho Operations Office, that annual updates to the documents are not required at this time.

If you have any questions, please contact Garrett Bright at (208)373-0163.

Sincerely,

Brian L. English
Hazardous Waste Permit Supervisor
Waste Management and Remediation Division

BLE/GB/er

ec: Margaret Olson, EPA Region 10
Rensay Owen, DEQ – Idaho Falls Regional Office
John Means, DEQ –State Office
Scott Reno, Fluor
File: EDMS – 2020BCQ53

Printed on recycled paper

STATE OF IDAHO
DEPARTMENT OF
ENVIRONMENTAL QUALITY

CCN 323374

1410 North Hilton • Boise, Idaho 83706 • (208) 373-0502
www.deq.idaho.gov

Governor Brad Little
Director John H. Tippets

February 05, 2019

Nicole Hernandez
U. S. Department of Energy
Idaho Operations Office
1955 Fremont Avenue
Idaho Falls, ID 83415

Subject: Response to Hazardous Waste Management Act/Resource Conservation and Recovery Act Part A Permit Application for the Idaho National Laboratory (INL), Volume 1 — Update for 2019, EPA ID# ID4890008952

Ms. Hernandez:

The Idaho Department of Environmental Quality (DEQ) received the 2019 update for the Part A Permit Application for the INL, Volume 1, on January 30, 2019. DEQ concurs with the determination made by Fluor Idaho, LLC, on the behalf of all INL contractors and the Department of Energy, Idaho Operations Office, that an annual update to the Part A Permit Application is not required at this time.

If you have any questions, please contact Garrett Bright at (208)373-0163.

Sincerely,

Brian L. English, P.G.
Hazardous Waste Permit Manager
Waste Management and Remediation Division

BLE/GB/er

cc: B. McCullough, EPA Region 10
R. Owen, DEQ IFRO
S. Reno, Fluor
G. Bright, DEQ STO
2019BCQ53

Printed on Recycled Paper

STATE OF IDAHO
DEPARTMENT OF
ENVIRONMENTAL QUALITY

CCN 321994

1410 North Hilton • Boise, Idaho 83706 • (208) 373-0502
www.deq.idaho.gov

C.L. "Butch" Otter, Governor
John H. Tippets, Director

March 22, 2018

Nicole Hernandez
U. S. Department of Energy
Idaho Operations Office
1955 Fremont Avenue
Idaho Falls, ID 83415

Subject: Response to Revised Hazardous Waste Management Act/Resource Conservation and Recovery Act Part A Permit Application for the Idaho National Laboratory (INL), Volume 1 — Update for 2018, EPA ID# ID4890008952

Ms. Hernandez:

The Idaho Department of Environmental Quality (DEQ) received the 2018 update for the Part A Permit Application for the INL, Volume 1, on March 16, 2018. The revision was primarily completed to update the Environmental Protection Agency (EPA) RCRA Subtitle C Site Inspection Form and the Hazardous Waste Permit Part A Form. Other editorial and administrative changes included removal of EPA Hazardous Waste Codes to be consistent with waste codes allowed at the INTEC Liquid Waste Management System, as well as an updated topographic map and facility drawing.

Based on review of the submittal, DEQ approves the revised Part A Permit Application, Volume 1.

If you have any questions, please contact Garrett Bright at (208)373-0163.

Sincerely,

Brian L. English, P.G.
Hazardous Waste Permitting Manager
Waste Management and Remediation Division

BLE/GB/er

cc: Barbara McCullough, EPA Region 10
Rensay Owen, DEQ IFRO
Scott Reno, Fluor
INppa6/G. Bright
2018BCQ134
COF

STATE OF IDAHO
DEPARTMENT OF
ENVIRONMENTAL QUALITY

1410 North Hilton • Boise, Idaho 83706 • (208) 373-0502
www.deq.idaho.gov

C.L. "Butch" Otter, Governor
John H. Tippets, Director

CCN 320485

March 09, 2017

Nicole Hernandez
U. S. Department of Energy
Idaho Operations Office
1955 Fremont Avenue
Idaho Falls, ID 83415

Subject: Response to Hazardous Waste Management Act/Resource Conservation and Recovery Act Part A Permit Application for the Idaho National Laboratory (INL), Volume 1 — Update for 2017, EPA ID# ID4890008952

Ms. Hernandez:

The Idaho Department of Environmental Quality (DEQ) received the 2017 update for the Part A Permit Application for the INL, Volume 1, on February 28, 2017.

DEQ concurs with the determination made by Fluor Idaho, LLC, on the behalf of all INL contractors and the Department of Energy, Idaho Operations Office, that an annual update to the Part A Permit Application is not required at this time.

If you have any questions, please contact Garrett Bright at (208)373-0163.

Sincerely,

Brian L. English, P.G.
Hazardous Waste Permit Manager
Waste Management and Remediation Division

BLE/GB/er

cc: Barbara McCullough, EPA Region 10
Rensay Owen, DEQ IFRO
Tauna Butler, DOE-ID
Scott Reno, Fluor
Alan Carvo, BEA
INppa6/G. Bright
COF

STATE OF IDAHO
DEPARTMENT OF
ENVIRONMENTAL QUALITY

CCN 319232

1410 North Hilton • Boise, Idaho 83706 • (208) 373-0502
www.deq.idaho.gov

C.L. "Butch" Otter, Governor
John H. Tippets, Director

April 28, 2016

Teresa Perkins, Director
U.S. Department of Energy
1955 Fremont Ave.
Idaho Falls, ID 83415

Subject: Approval of a Class One Permit Modification Request, Requiring Prior Approval, to Designate Fluor Idaho, LLC as the Contractor Operator for several HWMA/RCRA Partial Permits on the Idaho National Laboratory (INL), EPA ID ID4890008952

Dear Ms. Perkins:

The Idaho Department of Environmental Quality (DEQ) received Permit Modification Requests to change the designated contract operator to Fluor Idaho, LLC for the following HWMA/RCRA Final Partial Permits on the INL:

-Volume 14, *Partial Permit for HWMA Storage and Treatment for the Liquid Waste Management System at the Idaho Nuclear Technology and Engineering Center*, last revised November 30, 2015,

-Volume 18, *HWMA Storage and Treatment Permit for the Idaho Nuclear Technology and Engineering Center and the Radioactive Waste Management Complex*, last revised March 4, 2016,

-Volume 21, *HWMA Post-Closure Permit for the Idaho Nuclear Technology and Engineering Center Waste Calcining Facility and CPP-601/627/640*, effective March 14, 2014, and,

-*Advanced Mixed Waste Treatment Project HWMA/RCRA Permit*, last revised March 3, 2016.

The operator change also addressed the Interim Status Part A Permit Application for the INL (Volume 1), Transuranic Storage Area Interim Status (TSA-06), and *HWMA/RCRA Part B Permit Application for the Idaho National Laboratory, Volume 3 – General Information for INL Waste Management Units*.

The certification statements required at IDAPA 58.01.05.012 [40 CFR § 270.40(b)] for each partial permit accompanied the submittal. Therefore, DEQ grants prior approval for this modifications subject to the facility completing the mailing list notifications required at IDAPA 58.01.05.012 [40 CFR § 270.42(a)(1)(ii)].

The requested modifications address only the change in operator. Should Fluor Idaho wish to change emergency contacts or other material in a partial permit, the procedures in that partial permit and IDAPA 58.01.05.12 [40 CFR § 270.42] must be followed.

For any questions or comments, please contact Brian English at (208) 373-0502.

Sincerely,

Brian R. Monson
Hazardous Waste Program Manager
Waste Management and Remediation Division

BRM: BLE:js INLOpChg

cc: Barbara McCullough, EPA Region 10
Tauna Butler, DOE-ID
Fred Hughes, Fluor, Idaho
Rensay Owen, DEQ-IFRO
COF

STATE OF IDAHO
DEPARTMENT OF
ENVIRONMENTAL QUALITY

1410 North Hilton • Boise, Idaho 83706 • (208) 373-0502
www.deq.idaho.gov

C.L. "Butch" Otter, Governor
John H. Tippets, Director

March 2, 2016

Ms. Tauna Butler
U. S. Department of Energy
Idaho Operations Office
1955 Fremont Avenue
Idaho Falls, ID 83415

Subject: Response to Hazardous Waste Management Act/Resource Conservation and Recovery Act Part A Permit Application for the Idaho National Laboratory, Volume 1 — Update for 2016 (EPA ID Number ID4890008952)

Dear Ms. Butler:

The Department of Environmental Quality (DEQ) received the 2016 update for the Part A Permit Application for the Idaho National Engineering Laboratory (INL), Volume 1, on February 25, 2016. DEQ concurs with the determination made by CH2M-WG Idaho, LLC (CWI) on the behalf of all the INL contractors and the Department of Energy, Idaho Operations Office, that an annual update to the Part A Permit Application is not required at this time.

If you have any questions, please contact Elizabeth Thiel at (208) 373-0502.

Sincerely,

Robert E. Bullock
Hazardous Waste Permit Program Manager
Waste Management and Remediation Division

REB/ECT/js INLRspPrAVI

cc: Barbara McCullough, U.S. EPA – Region 10
Nicole Hernandez, DOE-ID
Scott Reno, CWI
Rensay Owen, DEQ IFRO
ECT/INppa6
COF

STATE OF IDAHO
DEPARTMENT OF
ENVIRONMENTAL QUALITY

CCN 317639

1410 North Hilton • Boise, Idaho 83706 • (208) 373-0502

C.L. "Butch" Otter, Governor
Curt Fransen, Director

April 2, 2015

Ms. Tauna Butler
U.S. Department of Energy
Idaho Operations Office (NE-ID)
1955 Fremont Ave.
Idaho Falls, ID 83415

SUBJECT: Hazardous Waste Management Act/Resource Conservation and Recovery Act Part A Permit Application for the Idaho National Laboratory, Volume 1, March 2015 Revision, EPA ID No. ID4890008952

Dear Ms. Butler:

The Department of Environmental Quality (DEQ), in accordance with IDAPA 58.01.05.012 [40 CFR §§ 270.13 and 270.72], has reviewed the March 2015 update to the Hazardous Waste Management Act (HWMA)/Resource Conservation and Recovery Act (RCRA) Interim Status Part A Permit Application, Volume 1. This revision was completed primarily to update the Environmental Protection Agency (EPA) Part A Forms (OMB #: 2015-0024) – RCRA Subtitle C Identification Form and the Hazardous Waste Permit Information From. There were also some minor changes to update information on the Tank Farm Facility.

Based upon review of the submittal, DEQ approves the revised Part A Permit Application, Volume 1.

If you have any questions, please contact Elizabeth Thiel at (208) 373-0502.

Sincerely,

Robert E. Bullock
Hazardous Waste Permits Program Manager
Waste Management & Remediation Division

REB/ECT/js Vol1315Aprvl

cc: Barbara McCullough, EPA Region 10
Rensay Owen, IFRO
Nicole Hernandez, DOE-ID
David Hutchison, CWI
Ann Boehmer, CWI
ECT/INppa6
COF

STATE OF IDAHO
DEPARTMENT OF
ENVIRONMENTAL QUALITY

CCN 316078

1410 North Hilton • Boise, Idaho 83706 • (208) 373-0502

C.L. "Butch" Otter, Governor
Curt Fransen, Director

February 3, 2014

Mr. Timothy Safford
U. S. Department of Energy
Idaho Operations Office
1955 Fremont Avenue
Idaho Falls, ID 83415

RE: Response to Hazardous Waste Management Act/Resource Conservation and Recovery Act Part A Permit Application for the Idaho National Laboratory, Volume 1 — Update for 2014 (EPA ID Number ID4890008952)

Dear Mr. Safford:

The DEQ received and has reviewed the referenced letter dated January 23, 2014. Based on this review, the DEQ concurs with the determination made by CH2M-WG Idaho, LLC on the behalf of the Department of Energy, Idaho Operations Office, that an annual update to the Part A Permit Application is not required at this time.

If you have any questions, please contact Elizabeth Thiel (208) 373-0502.

Sincerely,

Robert E. Bullock
Hazardous Waste Permit Program Manager
Waste Management and Remediation Division

REB/ECT/js PartAVol1Rspns

cc: Barbara McCullough, U.S. EPA – Region 10
Nicole Hernandez, DOE-ID
David Hutchison, CWI
Ann Boehmer, CWI
ECT/INppa6
COF

Printed on Recycled Paper

STATE OF IDAHO
DEPARTMENT OF
ENVIRONMENTAL QUALITY

RECD MAY 13 2013

CCN 315030

1410 North Hilton • Boise, Idaho 83706 • (208) 373-0502

C.L. "Butch" Otter, Governor
Curt Fransen, Director

May 9, 2013

Ms Nicole Hernandez
U. S. Department of Energy
Idaho Operations Office
1955 Fremont Avenue
Idaho Falls, ID 83415

Subject: Response to Hazardous Waste Management Act/Resource Conservation and Recovery Act Part A Permit Application for the Idaho National Laboratory, Volume 1 Update for 2013 (EPA ID Number ID4890008952)

Dear Ms Hernandez:

The Department of Environmental Quality (DEQ) received the 2013 update for the Part A Permit Application for the Idaho National Engineering Laboratory (INL) on February 25, 2013. DEQ concurs with the determination that an annual update to the Part A Permit Application is not required at this time.

If you have any questions, please contact Elizabeth Thiel of my staff at (208) 373-0163.

Sincerely,

Robert E. Bullock
Hazardous Waste Permit Program Manager
Waste Management and Remediation Division

REB/ECT/js INLRspPtAV61

cc: Barbara McCullough, U.S. EPA – Region 10
David Hutchison, CWI
Ann Boehmer, CWI
ECT/INppa6
COF

Printed on Recycled Paper

STATE OF IDAHO
DEPARTMENT OF
ENVIRONMENTAL QUALITY

REC'D APR 1 1 2012

CCN 313414

1410 North Hilton • Boise, Idaho 83706 • (208) 373-0502

C.L. "Butch" Otter, Governor
Curt Fransen, Director

April 6, 2012

Nicole Brooks
Idaho Department of Energy
Idaho Operations Office
1955 Fremont Ave.
Idaho Falls, Idaho 83415

Subject: Clean Copy Pages Received for Approved Modifications to the Idaho National Laboratory Hazardous Waste Management Act (HWMA)/Resource Conservation and Recovery Act (RCRA) Part A Permit Application, the INL Material and Fuels Complex (MFC) HWMA/RCRA Partial Permit and the INL MFC Sodium Processing Facility HWMA/RCRA Partial Permit

Dear Ms. Brooks:

The Idaho Department of Environmental Quality is in receipt of the clean copy pages of the permitting documents listed above. The permit modifications became effective on February 1, 2012. The submittals appear to be in order and are satisfactory.

Sincerely,

Robert E. Bullock
Hazardous Waste Permit Manager
Waste Management and Remediation Division

REB:ECT:js CleanCopyMFC

cc: Nina Kocourek, EPA Region 10
Jo Anna Stenzel, BEA
David P. Hutchison, CWI
ECT/INpsp/ INppa 6/INpanl 2
COF

STATE OF IDAHO
DEPARTMENT OF
ENVIRONMENTAL QUALITY

RECEIVED
AUG 0 9 2010

CCN 310604

1410 North Hilton • Boise, Idaho 83706 • (208) 373-0502

C.L. "Butch" Otter, Governor
Toni Hardesty, Director

August 4, 2010

Ms. Nicole Brooks
U.S. Department of Energy, Idaho Operations Office (NE-ID)
1955 Fremont Ave.
Idaho Falls, ID 83415

SUBJECT: Interim Status Part A Permit Application, Volume 1, July 2010 Revision, Idaho National Laboratory (INL), EPA ID No. ID4890008952

Dear Ms. Brooks:

The Department of Environmental Quality (DEQ), in accordance with IDAPA 58.01.05.012 [40 CFR §§ 270.13 and 270.72], has reviewed the July 2010 update to the Hazardous Waste Management Act (HWMA)/Resource Conservation and Recovery Act (RCRA) Interim Status Part A Permit Application, Volume 1. This revision was completed to remove eleven waste management tanks from the INTEC Tank Farm Facility (VES-WM-103 through 106, and VES-WM-180 through 186). DEQ approved the closure of these tanks on October 5, 2009 and the tanks are no longer under interim status.

Based upon review of the submittal, DEQ acknowledges removal of the above units and approves the revised Interim Status Part A Permit Application, Volume 1.

Please contact me at (208) 373-0502, if you have any questions.

Sincerely,

Robert E. Bullock
Hazardous Waste Permits Manager
Waste Management & Remediation Division

REB/PJ/js PartAPrmtApp

cc: Zach Hedgpeth, EPA Region 10
Rensay Owen, IFRO
Dave Hutchison, CWI
INppa/P. Johansen
COF

STATE OF IDAHO
DEPARTMENT OF
ENVIRONMENTAL QUALITY

RECEIVED
NOV 0 1 2009

CCN 309425

1410 North Hilton • Boise, Idaho 83706 • (208) 373-0502

C.L. "Butch" Otter, Governor
Toni Hardesty, Director

October 23, 2009

Ms. Nicole Brooks
U.S. Department of Energy
Idaho Operations Office (NE-ID)
1955 Fremont Ave.
Idaho Falls, ID 83415

SUBJECT: Interim Status Part A Permit Application, Volume 1, September 2009 Revision, Idaho National Laboratory (INL), EPA ID No. ID4890008952

Dear Ms. Brooks:

The Department of Environmental Quality (DEQ), in accordance with IDAPA 58.01.05.012 [40 CFR §§ 270.13 and 270.72], has reviewed the September 2009 update to the Hazardous Waste Management Act (HWMA)/Resource Conservation and Recovery Act (RCRA) Interim Status Part A Permit Application, Volume 1. This revision was completed to remove the CPP-640 Headend Storage Tank System and the CPP-603 Storage and Treatment Tank (VES-SFE-106) from Volume 1. Closure of the CPP-640 Headend Storage Tank unit was approved by the DEQ on June 12, 2008. Closure of the CPP-603 Storage and Treatment Tank unit (VES-SFE-106) was approved by the DEQ on May 12, 2009. As a result of the approved closures, these units no longer have interim status to operate as mixed waste storage facilities.

Based upon review of the submittal, DEQ acknowledges removal of the above units and approves the revised Interim Status Part A Permit Application, Volume 1.

If you have any questions, please contact Natalie Clough at (208) 373-0506.

Sincerely,

Robert E. Bullock
Hazardous Waste Permits Manager
Waste Management & Remediation Division

REB/NC/js Vol10909Apprvlt.ltr

cc: Zach Hedgpeth, EPA Region 10
Rensay Owen, IFRO
Dave Hutchison, CWI
INppa/N. Clough
COF

STATE OF IDAHO
DEPARTMENT OF
ENVIRONMENTAL QUALITY

RECEIVED
OCT 1 2 2009

CCN 309265

1410 North Hilton • Boise, Idaho 83706 • (208) 373-0502

C.L. "Butch" Otter, Governor
Toni Hardesty, Director

October 5, 2009

Mr. Dave Wessman
DOE – Idaho Operations Office
1955 Fremont Avenue
Idaho Falls ID 83415

Subject: Approval of HWMA/RCRA Closure Certifications Covering the Grouting of the Idaho Nuclear Technology and Engineering Center Tank Farm Facility Phases I-IV – Tanks WM-180, WM-181, WM-182, WM-183, WM-184, WM-185, WM-186, WM-103, WM-104, WM-105, and WM-106 - on the Idaho National Laboratory (EPA ID No. ID4890008952)

Dear Mr. Wessman:

The Department of Environmental Quality (DEQ) received the Phase I-IV Closure Certifications addressing grouting of the identified Tank Farm Facility (TFF) Tanks and ancillary equipment at the Idaho Nuclear Technology and Engineering Center on the Idaho National Laboratory on September 1, 2009. These Phase I-IV certifications, combined with the pre-grout certifications (received by DEQ on April 24, 2009), constitute the Professional Engineer's Certifications of Closure in accordance with the approved plans.

A summary of the phases is outlined below:

- Phase I of the TFF Closure addressed Tanks WM-182 and WM-183 and ancillary equipment specific to only these tanks. The public comment period for the November 2001 Plan began on March 15, 2002 and closed on April 15, 2002. DEQ approved the Plan on April 18, 2002. Minor revisions to the plan were submitted to DEQ on November 13, 2008 and the changes were approved by DEQ on December 22, 2008.

- Phase II of the TFF Closure addressed Tanks WM-184, WM-185, and WM-186 and associated ancillary equipment. The public comment period on the September 2003 plan began on November 14, 2003. DEQ approved the plan on February 25, 2004. Minor revisions to the plan were submitted to DEQ on November 20, 2008 and the changes were approved by DEQ on December 22, 2008.

- Phase III of the TFF Closure addressed Tanks WM-103, WM-104, WM-105, WM-106, and WM-181 and associated ancillary equipment. The public comment period on the May 2004 plan began on June 18, 2004. After a request for a public hearing was received, DEQ extended the public comment period through the September 9, 2004 public hearing. DEQ delayed approval of the Closure Plan pending the resolution of radioactive waste characterization issues. The issues were resolved and the Plan approved on September 1, 2006. Minor revisions to the closure plan were submitted to DEQ on November 25, 2008 and approved by DEQ on December 22, 2008.

- Phase IV of the TFF Closure addressed WM-180 and ancillary equipment. The public notice of this plan was combined with the Phase III notice of public hearing. Since that August 10, 2004 date all milestone dates of Phase IV have been concurrent with Phase III.

DEQ has completed a review of the closure certification and determined the Phase I-IV closures have been completed in accordance with the plan except for the minor deviations noted in the Professional Engineer's Certification. DEQ conducted verification of the closure during a September 30, 2009 site visit. The Phase V Closure Plan addresses the four remaining Tanks and must include all remaining and newly identified HWMA/RCRA lines subject to closure.

In accordance with IDAPA 58.01.05.009 [40 CFR § 265.115], the DEQ hereby approves the certification of closure. Since INL is a federal facility there is no release from financial assurance associated with this closure (See 40 CFR §265.115 and 40 CFR §265.143(h)).

If you have any questions or comments concerning this matter, please contact Robert Bullock at (208) 373-0502.

Sincerely,

Brian R. Monson
Hazardous Waste Program Manager
Waste Management and Remediation Division

BRM:js Approvll IVPECen

cc: Zach Hedgpeth, EPA 10
Robert Bullock, STO
Rensay Owen, DEQ IFRO
Dave Hutchinson, CWI
INiptc8/B. English
COF

STATE OF IDAHO
DEPARTMENT OF
ENVIRONMENTAL QUALITY

RECEIVED
MAY 14 2009

CCN 308531

1410 North Hilton • Boise, Idaho 83706 • (208) 373-0502

C.L. "Butch" Otter, Governor
Toni Hardesty, Director

May 12, 2009

Mr. David L. Wessman
VCO Project Manager
U.S. Department of Energy
Idaho Operations Office (NE-ID)
1955 Fremont Ave. Mail Stop 1216
Idaho Falls, ID 83415

RE: Closure Certification of the CPP-648 Radioactive Solid and Liquid Waste Storage Tank System (VES-SFE-106), Idaho National Laboratory, EPA ID No. ID4890008952

Dear Mr. Wessman:

On January 23, 2009, the Department of Environmental Quality (DEQ) received the Hazardous Waste Management Act (HWMA)/Resource Conservation and Recovery Act (RCRA) Closure Certification for the CPP-648 Radioactive Solid and Liquid Waste Storage Tank System (VES-SFE-106).

The DEQ reviewed the certification and supporting documents and on March 10, 2009, requested additional information. An April 22, 2009 Department of Energy (DOE) letter provided clarifying information. An inspection of the unit was conducted by DEQ on April 7, 2009.

Based upon review of the required certification, supporting documentation, and unit inspection, DEQ hereby acknowledges completion of the activities specified in the approved HWMA/RCRA Closure Plan for the CPP-648 Radioactive Solid and Liquid Waste Storage Tank System (VES-SFE-106).

As a result of this closure, the CPP-648 Radioactive Solid and Liquid Waste Storage Tank System (VES-SFE-106) no longer has interim status to operate as a mixed waste storage facility under IDAPA 58.01.05.009 [40 CFR Part 265].

If you have any questions, please contact Natalie Clough at (208) 373-0506.

Sincerely,

Robert E. Bullock
Hazardous Waste Permits Manager
Waste Management & Remediation Division

REB/NC/js SFE106ClsrCer

cc: Zach Hedgpeth, U.S. EPA – Region 10
Rensay Owen, DEQ IFRO
Mary Magelby, CWI
INipvw
COF

STATE OF IDAHO
DEPARTMENT OF
ENVIRONMENTAL QUALITY

1410 North Hilton • Boise, Idaho 83706 • (208) 373-0502

06-16-08 PT2:03 IN

CCN 306949

C.L. "Butch" Otter, Governor
Toni Hardesty, Director

June 12, 2008

Mr. David L. Wessman
U.S. Department of Energy
Idaho Operations Office (NE-ID)
1955 Fremont Ave.
Idaho Falls, ID 83401-1216

RE: Approval of the Closure Certification for the CPP-640 Headend Storage Tank System at INTEC on the Idaho National Laboratory, EPA ID No. ID4890008952

Dear Mr. Wessman:

The Department of Environmental Quality (DEQ) is in receipt of the June 2, 2008 Closure Certification for the CPP-640 Headend Storage Tank System. The certification indicates that the Headend Storage Tank System was successfully clean closed.

DEQ has reviewed the closure certification and found that it meets the requirements of IDAPA 58.01.05.009 [40 CFR § 265.115] and is therefore approved. In accordance with DEQ's December 28, 2007 letter approving the Class 1 Permit Modification, the date of this letter constitutes day one of the closure schedule for the CPP-641 Westside Waste Hold-up Tanks.

If you have any questions, contact Brian English at (208) 373-0425.

Sincerely,

for John H. Bruck

Brian R. Monson
Hazardous Waste Program Manager
Waste Management and Remediation Division

BRM:BE:js CPP640HeadendClsrApprvl

cc: Jeff Hunt, EPA Region 10
Rensay Owen, Idaho Falls Regional Office
Kliss McNeel, CWI
INppew
COF

STATE OF IDAHO
DEPARTMENT OF
ENVIRONMENTAL QUALITY

10-25-06 PM 3:42 RCVD

CCN 303738

1410 North Hilton • Boise, Idaho 83706 • (208) 373-0502

James E. Risch, Governor
Toni Hardesty, Director

October 25, 2006

Mr. Tim Safford
U. S. Department of Energy
Idaho Operations Office (NE-ID)
1955 Fremont Avenue
Idaho Falls, ID 83401-1216

SUBJECT: Interim Status Part A Permit Application, Volume 1, Revision August, 2006.
Idaho National Laboratory (INL), EPA ID No. ID4890008952

Dear Mr. Safford:

The Department of Environmental Quality (DEQ), in accordance with IDAPA 58.01.05.012 [40 CFR §§ 270.13 and 270.72], has reviewed the August 2006 update to the Hazardous Waste Management Act (HWMA)/Resource Conservation and Recovery Act (RCRA) Interim Status Part A Permit Application, Volume 1, for the Idaho National Laboratory (INL). This revision was completed to remove the proposed interim status unit "INTEC New Tank Farm" from the document.

Based upon review of the submittal, DEQ acknowledges removal of the above proposed unit and approves the revised Part A Permit Application. This letter constitutes final administrative disposition of the INTEC New Tank Farm. In accordance with IDAPA 58.01.05.012 [40 CFR § 270.73(a)], interim status for this unit is hereby terminated.

If you have any questions, please contact Natalie McLeod at (208) 373-0506.

Sincerely,

for Robert E. Bullock
Hazardous Waste Program Coordinator
Waste Management and Remediation Division

REB\NM\js c:/INLVol1Aug2006RespLtr

cc: Jeff Hunt, EPA Region 10
Kathleen Trever, INL Oversight
Rensay Owens, IFRO
Kliss McNeil, CWI
Carolyn Mascarenas, BEA
INppa/Natalie McLeod
COF

STATE OF IDAHO
DEPARTMENT OF
ENVIRONMENTAL QUALITY

CCN 303653

1410 North Hilton • Boise, Idaho 83706 • (208) 373-0502

James E. Risch, Governor
Toni Hardesty, Director

October 9, 2006

CERTIFIED MAIL # 7000 0520 0016 4834 6718
RETURN RECIEPT REQUESTED

John Medema
DOE NE-ID
1955 Fremont Ave
Idaho Falls, Idaho 8340-1216

RE: Response to Comments and Final Decision for the Calcined Solids Storage Facility (CSSF) Hazardous Waste Permit

Dear Mr. Medema:

The Department of Environmental Quality (DEQ) has reached a final decision to approve the Hazardous Waste Management Act (HWMA) Permit for the CSSF.

A public notice, proposing to approve a Hazardous Waste Facility Permit, appeared in The Idaho Statesman and the Post Register on August 11, 2006. The public comment period for the draft permit ended September 25, 2006. The purpose of the public notice was to afford the public the opportunity to comment on the draft permit. During the public comment period, DEQ received no written requests for a public hearing. DEQ received written comments from DOE concerning the draft permit.

In accordance with IDAPA 58.01.05.013 [40 CFR § 124.15(a)], the applicant, and all persons who submitted comments on the draft permit, must be notified when a final permit decision is made. This letter constitutes notification that DEQ, acting under the authority of the Hazardous Waste Management Act of 1983 (HWMA), as amended, hereby approves the permit.

Any person who filed comments on the draft permit may, within thirty (30) calendar days of this decision, petition the Director to review any condition of the final permit. Petitions shall include a statement of the reasons supporting the review, including a demonstration that any issues being raised, were raised during the comment period to the extent required by these regulations, and when appropriate, a showing that the condition in question is based on: (1) A finding of fact or conclusion of law that is clearly erroneous, or (2) An exercise of discretion, or an important policy consideration that the Director should, in his discretion, review in accordance with IDAPA 58.01.05.013 [40 CFR § 124.19(a)].

If you have any questions, please contact Brian R. Monson at (208) 373-0502.

Sincerely,

Toni Hardesty
Director

TH/BRM/js

Enclosure

cc: Jeff Hunt, EPA Region10 (w/enc)
Rensay Owens, IFRO ~ Permits (w/enc)
Kliss McNeill, CH2MHill (wo/enc)
Ann Boehmer, WGI (wo/enc)
Kathleen Trever, INEEL Oversight (wo/enc)
INipcs/Beth McPherson
COF

RESPONSE TO COMMENTS

DOE Comments

1. **COMMENT:** List of Attachments, pages 4 and 5 of 36: Please remove the "03" from all February 2006 dates, to be consistent with the headers of all Permit Attachments.

   RESPONSE: DEQ concurs with this comment.

   CHANGES: The requested change has been made.

2. **COMMENT:** List of Attachments, page 4 of 36: Please correct "Section F-2 Inspection Schedule and Appendix F-1 (pages 1-3)" to read "Section F-2 Inspection Schedule (pages 1-3) and Appendix F-1"

   RESPONSE: DEQ concurs with this comment.

   CHANGES: The requested change has been made.

3. **COMMENT:** Definitions, page 6 of 36: Please change the definition of Application to read: "Application" shall mean the Following; The HWMA/RCRA Part B Permit Application for the Idaho National Laboratory, Volume 22, Calcined Solids Storage Facility Book 1, Revision 2, February 2006, and all DEQ approved Permit Modification Requests as detailed in Attachment 9, Permit Revision Log.

   RESPONSE: DEQ concurs with this comment.

   CHANGES: The requested change has been made.

4. **COMMENT:** Definitions, page 6 of 36: Please delete the definition for "Co-Operator" to be consistent with remainder of the Permit.

   RESPONSE: DEQ concurs with this comment.

   CHANGES: The requested change has been made.

5. **COMMENT:** Acronyms and Abbreviations, page 8 of 36: Please correct Department of Energy/Idaho to read "Department of Energy, Idaho Operations Office"

   RESPONSE: DEQ concurs with this comment.

   CHANGES: The requested change has been made.

6. **COMMENT:** Acronyms and Abbreviations, page 9 of 36: Please correct the acronym for Radiological Control Technician to read "RCT"

RESPONSE: DEQ concurs with this comment.

CHANGES: The requested change has been made.

7. **COMMENT:** Permit Condition I.U., page 18 of 36: Please change the report to August 1 and February 1.

RESPONSE: DEQ concurs with this comment.

CHANGES: The requested change has been made.

8. **COMMENT:** Permit Condition II.E.3.a., page 21 of 36: Please change the first portion (the four bullets remain unchanged) of Permit Condition II.E.3.a. to read; "The Permittee shall, for areas where deterioration or malfunction is discovered by an inspection and is not in accessible areas due to ALARA concerns, provide a verbal notification to the Director within 24 hours. In addition, a written notification shall be provided within 15 days and include the following information:"

RESPONSE: DEQ concurs with this comment.

CHANGES: The requested change has been made.

9. **COMMENT:** Permit Condition II.E.5., page 21 of 36: Please delete this Permit Condition as it is redundant with the other inspection requirements and is not specific to any given instrumentation.

RESPONSE: DEQ concurs with this comment.

CHANGES: The requested change has been made.

10. **COMMENT:** Permit Condition II.G.4., page 22 of 36: Please delete this Permit Condition.

RESPONSE: DEQ concurs with this comment.

CHANGES: The requested change has been made.

11. **COMMENT:** Permit Condition II.H.1., page 23 of 36: Please revise Permit Condition II.H.1. to read; "The Permittee shall comply with the Contingency Plan provisions of IDAPA 58.01.05.008 [40 CFR § 264 Subpart D, Contingency Plan and Emergency Procedures] as modified by the contingency Plan in Attachment 7, and as follows:"

RESPONSE: DEQ concurs with this comment.

CHANGES: The requested change has been made.

12. **COMMENT:** Permit Condition II.I., page 24 of 36: Please revise Permit Condition II.I. to read; "Not applicable to CSSF".

RESPONSE: DEQ concurs with this comment.

CHANGES: The requested change has been made.

13. **COMMENT:** Permit Condition II.J., page 24 of 36: Please delete "For each document identified in permit conditions II.J.2. through II.J.5. the Permittee shall coordinate with DOE, DOE contractors, DOE sub-contractors to compile and submit the required information for all permitted and interim status units located on INL." Please add; "The certification shall address the entire INL, unless otherwise approved by the DEQ." to the end of Permit Condition II.J.3., "The report shall address the entire INL, unless otherwise approved by the DEQ." to the end of Permit Condition II.J.2.

RESPONSE: DEQ concurs with this comment.

CHANGES: The requested change has been made.

14. **COMMENT:** Permit Conditions II.J.2. and II.J.3., page 24 of 36: Please reverse the order of these permit conditions to be consistent with the previously issued INL permits.

RESPONSE: DEQ concurs with this comment.

CHANGES: The requested change has been made.

15. **COMMENT:** Permit Condition II.J.6., page 25 of 36: Please change Permit Condition II.J.6. to read "The Permittee shall submit a biennial report to the Director describing all efforts to remove and dispose the calcine currently stored in CSSF. This report is due two years after the Permit effective date, and every two years thereafter."

RESPONSE: DEQ concurs with this comment.

CHANGES: The requested change has been made.

16. **COMMENT:** Permit Condition II.J.7., page 25 of 36: Please revise Permit Condition Permit Condition II.J.7. to read; "All reports, notifications, applications, or other materials required to be submitted to the Director, shall be submitted in accordance with Permit Conditions I.W. and I.Y. of this Permit."

RESPONSE: DEQ concurs with this comment.

CHANGES: The requested change has been made.

17. **COMMENT:** Permit Condition II.K.2., page 25 of 36: Please delete Permit Conditions II.K.2. and II.K.2.a.

RESPONSE: DEQ acknowledges this comment, and appreciates the draft schedule of proposed video inspections. However, elimination of the two Permit Conditions effectively removes the requirements requiring a specific schedule for internal inspections of the CSSF vaults, and therefore, they cannot be removed. Additionally, the public comment period is not the appropriate venue in which to propose the inspection frequency. Once effective, the Permittee shall be required to submit the proposed schedule in accordance with the established Permit. The schedule provided did demonstrate that 9 months to complete the first visual inspections may not be adequate, but 12 months would be.

CHANGES: Increased the time frame to complete the first inspections from 9 months to 12 months.

18. **COMMENT:** Permit Conditions II.K.5., II.K.6., IV.B., and IV.C., pages 25, 26, and 35 of 36: For consistency with the previously issued Volume 14 Permit which also references Corrective Action requirements in the previously issued Volume 18, Permit Module VII, please delete these permit conditions.

RESPONSE: DEQ agrees to deleting Permit Conditions II.K.5., II.K.6., and IV.C., but not to deleting IV.B. IV.B. is language that should be in every permit, that references the Corrective Action requirements in Volume 18, because it covers what will be required if the Volume 18 Permit ceases to exist.

CHANGES: DEQ has removed Permit Conditions II.K.5., II.K.6., and IV.C.

19. **COMMENT:** Permit Condition III.A., page 28 of 36: Please correct referenced Permit condition "III.D." to "III.B.".

RESPONSE: DEQ concurs with this comment.

CHANGES: The requested change has been made.

20. **COMMENT:** Permit Condition III.B., page 29 of 36: Please delete "and III.B.2." as there is no Permit Condition III.B.2.

RESPONSE: DEQ concurs with this comment.

CHANGES: The requested change has been made.

21. **COMMENT:** Permit Condition III.B.1. table for CSSF #7, page 31 of 36: Please correct maximum volume to 1784m^3 to match the Part A.

RESPONSE: DEQ concurs with this comment.

CHANGES: The requested change has been made.

22. **COMMENT:** Permit Condition III.D.3., page 31 of 36: Please delete Permit Condition III.D.3. Permit Condition III.D.3. is redundant with the requirements of Permit Condition I.R. and can be deleted.

RESPONSE: DEQ concurs with this comment.

CHANGES: The requested change has been made.

23. **COMMENT:** Permit Condition III.F.2., page 32 of 36: Please add; "in a release to the environment" at the end of the first sentence to clarify increased monitoring requirements will be specific to bin sets/vaults involved in releases to the environment.

RESPONSE: DEQ acknowledges this comment; however, the purpose of this requirement is to establish increased monitoring of the area surrounding the CSSF systems if there is a failure of a bin to a vault as well as to releases to the environment. Without this additional monitoring there would be no way to know if the vaults are preventing the released calcine from entering the environment.

CHANGES: None

24. **COMMENT:** Permit Condition III.G.2., page 33 of 36: Please correct the referenced permit conditions to "III.G.3." and "III.G.5.".

RESPONSE: DEQ concurs with this comment.

CHANGES: The requested change has been made.

25. **COMMENT:** Permit Condition III.G.3.a., page 33 of 36: Please change to read "external and accessible portions" to clarify the inspection requirement.

RESPONSE: DEQ concurs with this comment.

CHANGES: The requested change has been made.

26. **COMMENT:** Permit Condition III.G.4., page 33 of 36: Please correct the referenced permit conditions "III.G.2." and "III.G.3.", to "III.G.3." and "III.G.5".

RESPONSE: DEQ concurs with this comment.

CHANGES: The requested change has been made.

27. **COMMENT:** Permit Condition III.G.5., page 33 of 36: Please delete "as identified in Permit Condition II.K.2." from the end of the first bullet as this Permit Condition has been deleted (see comment 17).

RESPONSE: DEQ acknowledges this comment; however Permit Condition II.K.2 was not deleted as requested (see response 17).

CHANGES: None

28. **COMMENT:** Permit Condition III.H.1., page 33 of 36: Please change "report" to "reported" in the first line of the permit condition, and change "time of release" to "time of detection of the release" in the forth line of the permit condition.

RESPONSE: DEQ concurs with this comment.

CHANGES: The requested change has been made.

29. **COMMENT:** Permit Condition III.H.3., page 34 of 36: Please delete the repeated Permit Condition III.H.3.

RESPONSE: DEQ concurs with this comment.

CHANGES: The requested change has been made.

30. **COMMENT:** Permit Condition III.H.4., page 34 of 36: Please delete Permit Condition III.H.4., Permit Condition III.H.4. is redundant with the requirements of Permit Conditions III.D.1. and III.D.2. and can be deleted.

RESPONSE: DEQ acknowledges this comment; however Permit Condition III.H.4. contains additional requirements not identified in Permit Conditions III.D.1. and III.D.2..

CHANGES: None

31. **COMMENT:** Permit Condition IV.A., page 35 of 36: Please correct the reference to Volume 18, "Module IV" to "Module VII".

RESPONSE: DEQ agrees to this comment.

CHANGES: The requested change has been made.

32. **COMMENT:** Table 1, page 36 of 36: Please revise Table 1 as follows:

TABLE 1 REQUIRED SUBMITTALS and DATES REQUIRED SUBMITTAL/DOCUMENT	DUE DATES
Non-Compliance Report (Permit Condition I.U)	February 1 and August 1 every year
Waste Minimization Certification (Permit Condition II.J.2)	March 1 every year
Biennial Report (Permit Condition II.J.3)	March 1 even numbered years
Waste Minimization Report (Permit Condition II.J.4)	March 31, years: 2007, 2011, 2015
5 year reopener (Permit Condition II.G.1)	TBD 2011
Permit Application re-application(Permit Condition II.G.2)	TBD 2016

RESPONSE: DEQ agrees to this comment.

CHANGES: The requested change has been made.

STATE OF IDAHO
DEPARTMENT OF
ENVIRONMENTAL QUALITY

07-12-06 A10:28 IN

CCN 303043

1410 North Hilton • Boise, Idaho 83706-1255 • (208) 373-0502

Dirk Kempthorne, Governor
Toni Hardesty, Director

CERTIFIED MAIL #: 7099 3220 0006 2681 0621
RETURN RECEIPT REQUESTED

July 7, 2006

Mr. John Medema
U. S. Department of Energy
Idaho Operations Office (NE-ID)
1955 Fremont Avenue
Idaho Falls, ID 83401-1216

SUBJECT: Interim Status Part A Permit Application, Volume 1, Revision March, 2006. Idaho National Laboratory (INL), EPA ID No. ID4890008952

Dear Mr. Safford:

The Department of Environmental Quality (DEQ), in accordance with IDAPA 58.01.05.012 [40 CFR 270.13 and § 270.72], has reviewed the March 2006 update to the Interim Status Part A Permit Application, Volume 1, for the Idaho National Laboratory (INL).

Based on this review, the DEQ provides the following comment: The proposed "INTEC New Tank Farm is currently listed on the Part A as a possible replacement for the existing Tank Farm Facility tanks. However, it has come to DEQ's attention, through previous discussions, that DOE does not intend to proceed with construction of the INTEC New Tank Farm to store or otherwise manage hazardous or mixed wastes. Therefore, DOE shall submit the necessary documentation for administrative closure of the proposed units, including three (3) copies of the requisite revised Part A to effect removal of the INTEC New Tank Farm.

Based on a recent discussion with Pam Cunningham, CWI, DEQ anticipates receiving the above documentation within sixty (60) days of DOE's receipt of this letter. If you have any questions, please contact Natalie McLeod at (208) 373-0506.

Sincerely,

Robert E. Bullock
Hazardous Waste Program Coordinator
Waste Management and Remediation Division

REB\NM\jc

cc: Jeff Hunt, EPA Region 10
Kathleen Trever, INL Oversight
Rensay Owens, IFRO
Kliss McNeil, CWI
Carolyn Mascarenas, BEA
INppa
COF

01-02-06 P01:50 IN

CCN 301778

STATE OF IDAHO
DEPARTMENT OF
ENVIRONMENTAL QUALITY

1410 North Hilton • Boise, Idaho 83706-1255 • (208) 373-0502

Dirk Kempthorne, Governor
Toni Hardesty, Director

December 21, 2005

Mr. Tim Safford
U.S. Department of Energy
Idaho Operations Office (NE-ID)
1955 Fremont Avenue
Idaho Falls, Idaho 83401-1216

Re: Approval of a Class 3 Permit Modification, with Changes, for the Idaho Nuclear Technology and Engineering Center (INTEC) Liquid Waste Management System (Volume 14) HWMA/RCRA Storage and Treatment Partial Permit at the Idaho National Laboratory, EPA ID No. ID4890008952.

Dear Mr. Safford:

A public notice proposing approval of the permit modification appeared in *The Post Register* of Idaho Falls and *The Idaho Statesman* of Boise. The purpose of the public notice was to announce the Department of Environmental Quality's (DEQ) intent to approve the proposed permit modification and to allow the public and other interested parties the opportunity to comment on the same. A 45-day public comment period began on October 21, 2005 and ended on December 5, 2005. The public notice also announced a public hearing on the proposed modification. The hearing was held November 29, 2005 in Idaho Falls.

Having fully considered the Department of Energy's request to modify the ILWMS Partial Permit, having provided opportunity for public participation, and responded to the comments received (see enclosure), the DEQ hereby approves the modified Partial Permit with changes. In accordance with the provisions of IDAPA 58.01.05.013 [40 CFR §124.15(b)], the modified permit is effective on January 23, 2005 unless a review is requested in accordance with IDAPA 58.01.05.013 [40 CFR §124.19(a)].

Any person who filed comments on the draft permit may, within 30 calendar days of this decision, petition the Director to review any condition of the final permit. Petitions shall include a statement of the reasons supporting the review, including a demonstration that any issues being raised were raised during the comment period, to the extent required by these regulations and when appropriate, a showing that the condition in question is based on: (1) A finding of fact or conclusion of law that is clearly erroneous, or (2) An exercise of discretion or an important policy consideration that the Director should, in his discretion, review in accordance with IDAPA 58.01.05.013 [40 CFR § 124.19(a)].

If you have any questions concerning the ILWMS Storage and Treatment Permit, please contact Robert Bullock at (208) 373-0502.

Sincerely,

Brian R. Monson
Hazardous Waste Program Manager
Waste Management and Remediation Division

BRM:BLE:tg c:\...\brian e\vol 14\ets cl3 approval.doc

Enclosure

cc: J. Hunt, EPA Region 10
K. Trevor, INL Oversight
COF
R. Owen, DEQ-Idaho Falls
INppew\B. English

STATE OF IDAHO
DEPARTMENT OF
ENVIRONMENTAL QUALITY

CCN 55615

1410 North Hilton • Boise, Idaho 83706-1255 • (208) 373-0502

Dirk Kempthorne, Governor
C. Stephen Allred, Director

April 26, 2005

VIA FACSIMILE AND CERTIFIED MAIL #: 7099 3220 0009 1975 5219
RETURN RECEIPT REQUESTED

Tim Safford
U. S. Department of Energy
Idaho Operations Office (NE-ID)
1955 Fremont Avenue
Idaho Falls, ID 83401-1216

Re: Class 1 Permit Modification Request, Requiring Prior Approval, for the Final Hazardous Waste Management Act/ Resource Conservation and Recovery Act Partial Permits for the INTEC Liquid Waste Management System (Volume 14), INTEC Storage and Treatment Permit (Volume 18) and Waste Calcining Facility Post-Closure Care (Volume 21) and Revised Part A Application for the HWMA/RCRA Interim Status Units for the Idaho National Engineering Laboratory (EPA ID No. ID4890008952).

Dear Mr. Safford:

The Department of Environmental Quality (DEQ) has completed a review of the Hazardous Waste Management Act (HWMA)/ Resource Conservation and Recovery Act (RCRA) permit modification request for the above listed permits and revised part A application for the HWMA/RCRA Interim Status Units for the INL received on April 20, 2005. The requested permit modification for the partial permits and revised part A application address the transfer of operational control from Bechtel BWXT Idaho, LLC to CH2M WG Idaho, LLC (CWI).

DEQ has determined that the requested change is a Class 1 permit modification, requiring prior approval, and is hereby approved. The revised part A application is also approved.

If you have any questions concerning this permit action, please contact Robert Bullock at (208) 373-0502.

Sincerely,

Brian R. Monson
Hazardous Waste Program Manager
Waste Management and Remediation Division

BRM:BE:tg c:\...\brian e\vol 14\transfer-5-01-05.doc

cc: Kliss McNeil, CWI
Rensay Owen, DEQ-Idaho Falls
INpbgc \B. English
Jeff Hunt, U.S. EPA - Region 10
Kathleen Trever, INEEL Oversight
COF

STATE OF IDAHO
DEPARTMENT OF
ENVIRONMENTAL QUALITY

CCN 201079

1410 North Hilton • Boise, Idaho 83706-1255 • (208) 373-0502

Dirk Kempthorne, Governor
C. Stephen Allred, Director

April 24, 2005

Mr. Tim Safford
Idaho Operations Office (NE-ID)
Department of Energy
1955 Fremont Avenue
Idaho Falls, Idaho 83401-1216

SUBJECT: Interim Status Part A Permit, Volume I, Revision March, 2005, for the Idaho National Engineering and Environmental Laboratory (EPA ID No. ID4890008952)

Dear Mr. Safford:

The Department of Environmental Quality, in accordance with IDAPA 58.01.05.012 [40 CFR § 270.13 and § 270.72], has reviewed the March, 2005, update to the Interim Status Part A Permit, Volume 1, for the Idaho National Engineering and Environmental Laboratory (INEEL).

Based on this review, it appears that DOE has provided the requisite information.

If you have any questions or comments, please contact Mr. Gary Adamson at (208) 373-0316.

Sincerely,

Robert E. Bullock
Hazardous Waste Program Coordinator
Waste Management & Remediation Division

REB\GA:ab C:\Documents and Settings\abigelow\My Documents\Bob B VOL 1\Book 1 March 05 approval.DOC

cc: Jeff Hunt, EPA Region 10
Rensay Owens, IFRO
COF
Carolyn Mascarenas, BBWI
Kathleen Trever, INEEL Oversight
INppa 5

STATE OF IDAHO
DEPARTMENT OF
ENVIRONMENTAL QUALITY

CCN 53868

1410 North Hilton • Boise, Idaho 83706-1255 • (208) 373-0502

Dirk Kempthorne, Governor
Toni Hardesty, Director

December 1, 2005

Mr. Tim Safford
Idaho Operations Office (NE-ID)
Department of Energy
1955 Fremont Avenue
Idaho Falls, Idaho 83401-1216

SUBJECT: Interim Status Part A Permit, Volume I, Revision September, 2004, for the Idaho National Engineering and Environmental Laboratory (EPA ID No. ID4890008952)

Dear Mr. Safford:

The Department of Environmental Quality, in accordance with IDAPA 58.01.05.012 [40 CFR § 270.13 and § 270.72], has reviewed the update, received October 4, 2004, to the Interim Status Part A Permit Volume 1 for the Idaho National Engineering and Environmental Laboratory (INEEL).

Based on this review, it appears that DOE has provided the requisite information.

If you have any questions or comments, please contact Mr. Gary Adamson at (208) 373-0316.

Sincerely,

Robert E. Bullock
Hazardous Waste Program Coordinator
Waste Management & Remediation Division

REB\GA:tg c:\..\gary\Vol 1, Book 1, Sept 03 Approval.doc

cc: Jeff Hunt, EPA Region 10
Rensay Owens, DEQ-Idaho Falls
COF
Carolyn Mascarenas, BBWI
Kathleen Trever, INEEL Oversight
INppa 5\G. Adamson

CCN 52577

STATE OF IDAHO
DEPARTMENT OF
ENVIRONMENTAL QUALITY

1410 North Hilton • Boise, Idaho 83706-1255 • (208) 373-0502

Dirk Kempthorne, Governor
Toni Hardesty, Director

September 16, 2004

CERTIFIED MAIL #: 7099 3220 0009 1975 0023
RETURN RECEIPT REQUESTED

Timothy Safford
Idaho Operations Office (NE-ID)
US Department of Energy
1955 Fremont Avenue
Idaho Falls, ID 83401-1216

RE: Response to Comments and Final Decision for a Hazardous Waste Partial Permit at the INEEL (EPA ID No. ID4890008952)

Dear Mr. Safford:

The Department of Environmental Quality (DEQ) has reached a final decision to approve the Hazardous Waste Management Act (HWMA) Volume 14 Partial Permit for the Idaho Nuclear Technology and Engineering Center (INTEC) Liquid Waste Management System (ILWMS) on the Idaho National Engineering Laboratory.

A public notice, proposing to approve a Hazardous Waste Facility Permit, appeared in The Idaho Statesman and the Post Register on March 24, 2004. A public hearing on the draft permit was held in Idaho Falls on May 19, 2004. The public comment period for the draft permit ended May 24, 2004. The purpose of the public notice was to afford the public the opportunity to comment on the draft permit. DEQ received written comments from DOE and the Environmental Defense Institute concerning the draft permit. No comments were received during the public hearing.

In accordance with IDAPA 58.01.05.013 [40 CFR §124.15(a)], the applicant and all persons who submitted comments on the draft permit must be notified when a final permit decision is made. This letter constitutes notification that DEQ, acting under the authority of the Hazardous Waste Management Act of 1983 (HWMA), as amended, hereby approves the permit. A copy of the Response to Comments is enclosed.

Any person who filed comments on the draft permit may, within thirty (30) calendar days of this decision, petition the Director to review any condition of the final permit. Petitions shall include a statement of the reasons supporting the review, including a demonstration that any issues being raised were raised during the comment period, to the extent required by these regulations and when appropriate, a showing that the condition in question is based on: (1) A finding of fact or conclusion of law that is clearly erroneous, or (2) An exercise of discretion or an important policy consideration that the Director should, in his discretion, review in accordance with IDAPA 58.01.05.013 [40 CFR § 124.19(a)].

If you have any questions, please contact me at (208) 373-0502.

Sincerely,

Brian R. Monson
Hazardous Waste Program Manager
Waste Management and Remediation Division

BRM:BLE:tg c:\...\brian e\vol 14\vol 14 facility notice.doc

Enclosure: Final Permit and Response to Comments

cc: Jeff Hunt, EPA Region 10 (wo/enc.)
Source File\B. English
Rensay Owen, DEQ-Idaho Falls (wo/enc.)
COF
Carolyn Mascarenas

CCN 47930

STATE OF IDAHO
DEPARTMENT OF
ENVIRONMENTAL QUALITY

1410 North Hilton • Boise, Idaho 83706-1255 • (208) 373-0502

Dirk Kempthorne, Governor
C. Stephen Allred, Director

February 6, 2004

Mr. Tim Safford
Idaho Operations Office (NE-ID)
Department of Energy
1955 Fremont Avenue
Idaho Falls, Idaho 83401-1216

SUBJECT: Interim Status Part A Permit, Volume I, Revision September, 2003, for the Idaho National Engineering and Environmental Laboratory (EPA ID No. ID4890008952)

Dear Mr. Safford:

The Department of Environmental Quality, in accordance with IDAPA 58.01.05.012 [40 CFR § 270.13 and § 270.72], has reviewed the September, 2003 update to the Interim Status Part A Permit Volume 1 for the Idaho National Engineering and Environmental Laboratory (INEEL).

Based on this review, it appears that DOE has provided the requisite information.

If you have any questions or comments, please contact Mr. Gary Adamson at (208) 373-0316.

Sincerely,

Robert E. Bullock
Hazardous Waste Program Coordinator
Waste Management & Remediation Division

REB\GA:ls \Volume 1\2004\Letters\Vol 1, Book 1, Sept 03 Approval.doc

cc: Jeff Hunt, EPA Region 10
Rensay Owens, IFRO
COF
Carolyn Mascarenas, BBWI
Kathleen Trever, INEEL Oversight
INppa 5

STATE OF IDAHO
DEPARTMENT OF
ENVIRONMENTAL QUALITY

1410 North Hilton • Boise, Idaho 83706-1255 • (208) 373-0502

Dirk Kempthorne, Governor
C. Stephen Allred, Director

September 3, 2003

Mr. Tim Safford
Idaho Operations Office
Department of Energy
850 Energy Drive
Idaho Falls, ID 83401-1563

Class 3 Permit Modification for the Volume 18 HWMA/RCRA Storage and Treatment Partial Permit for the Idaho Nuclear Technology and Engineering Center (INTEC) at the Idaho National Engineering and Environmental Laboratory (EPA ID No. ID4890008952)

Dear Mr. Safford:

A public notice proposing approval of the permit modification appeared in *The Post Register* of Idaho Falls and *The Idaho Statesman* of Boise. The purpose of the public notice was to announce the Department of Environmental Quality's (DEQ) decision to approve the proposed permit modification and to allow the public and other interested parties the opportunity to comment on the same. A 45-day public comment period began on July 16, 2002 and ended on September 1, 2003. A public hearing was also held August 21, 2003.

Having fully considered the Department of Energy's (DOE) request to modify the Volume 18 Partial Permit, and having provided opportunity for public participation, DEQ hereby approves the modified partial permit. In accordance with the provisions of IDAPA 58.01.05.013 [40 CFR § 124.15(b)(3)], the modified permit is effective immediately.

If you have any questions concerning the INTEC Storage and Treatment Permit, please contact Mr. Robert Bullock at (208) 373-0502.

Sincerely,

Brian R. Monson, Hazardous Waste Program Mgr.
Waste Management and Remediation Division

BRM\GA:ls \\intec\2003\Permit Approval Letter

Jeff Hunt, EPA Region 10
Kathleen Trever, INEEL Oversight
COF

Rensay Owen, Idaho Falls R.O.
INpv18

STATE OF IDAHO
DEPARTMENT OF
ENVIRONMENTAL QUALITY

CCN 38674

1410 North Hilton • Boise, Idaho 83706-1255 • (208) 373-0502

Dirk Kempthorne, Governor
C. Stephen Allred, Director

December 17, 2002

Mr. Tim Safford
Idaho Operations Office
Department of Energy
850 Energy Drive
Idaho Falls, Idaho 83401-1563

SUBJECT: RCRA Part A Permit Application, Volume 1, Book 1, Revision November, 2002 for the Idaho National Engineering and Environmental Laboratory (EPA ID No. ID4890008952)

Dear Mr. Safford;

The State of Idaho, Department of Environmental Quality (DEQ), in accordance with applicable requirements of IDAPA 58.01.05.012 [40 CFR § 270.13] and IDAPA 58.01.05.013 [40 CFR § 270.72], has reviewed DOE-ID's November, 2002 Revision to the HWMA/RCRA Part A Permit Application for the Idaho National Engineering and Environmental Laboratory.

The following two omissions were noted in the submittal:

1. The first paragraph of the Introduction needs to explain the purpose of the November, 2002 revision, and
2. The revision log needs to be updated to show the November, 2002 revision.

In a December 3, 2002 telephone conversation, it was confirmed that these two omissions would be corrected in the Spring, 2003 update.

Based on DEQ's review, this submittal appears to provide the requisite information.

If you have any questions or comments, please contact Mr. Gary Adamson at (208) 373-0316.

Sincerely,

Brian R. Monson, Hazardous Waste Program Mgr.
Waste Management and Remediation Division

BRM\GA:ls \Volume I\2002\Vol 1. Book 1. November, 02 Approval

cc: Jeff Hunt, EPA Region 10
R. H. Guymon, Bechtel BBWXT Idaho
Kathleen Trever, INEEL Oversight
COF
INppa 5

STATE OF IDAHO
DEPARTMENT OF
ENVIRONMENTAL QUALITY

CCN 37291

1410 North Hilton • Boise, Idaho 83706-1255 • (208) 373-0502

Dirk Kempthorne, Governor
C. Stephen Allred, Director

October 29, 2002

Mr. Tim Safford
Idaho Operations Office
U.S. Department of Energy
850 Energy Drive
Idaho Falls, Idaho 83401-1563

SUBJECT: RCRA Part A Permit Application, Volume I, Book 1, Revised September, 2002 for the Idaho National Engineering and Environmental Laboratory (EPA ID No. ID4890008952)

Dear Mr. Safford:

The State of Idaho, Department of Environmental Quality (DEQ), in accordance with IDAPA 58.01.05.012 [40 CFR 270.13] and IDAPA 58.01.05.013 [40 CFR 270.72], has reviewed the Department of Energy's (DOE-Idaho) September 2002 revision to the HWMA/RCRA Part A Permit Application for the Idaho National Engineering and Environmental Laboratory.

Based on this review, it appears DOE has provided the requisite information.

If you have any questions or comments, please contact Mr. Gary Adamson at (208) 373-0316.

Sincerely,

Brian R. Monson, Hazardous Waste Program Mgr.
State Waste Management and Remediation Division

BRM\GA:ls \2002\Vol 1, Book 1, Sept 02 Approval

cc: Jeff Hunt, EPA Region 10
Rensay Owen, Idaho Falls R.O.
INppa 5
[redacted]
Kathleen Trever, INEEL Oversight
COF

CCN # 32738

BEFORE THE DIRECTOR OF THE
IDAHO DEPARTMENT OF ENVIRONMENTAL QUALITY

IN THE MATTER OF THE HAZARDOUS WASTE TREATMENT AND STORAGE PARTIAL PERMIT FOR UNITS AT INEEL BLDGS. CPP 659/1659	NOTICE OF DECISION AND ORDER
DAVID McCOY, Petitioner	IDAPA 58.01.05.013 [40 CFR § 124.19]

TO: PETITIONER, DAVID McCOY, THE UNITED STATES DEPARTMENT OF ENERGY, IDAHO OFFICE, AMICUS – Environmental Defense Institute, AMICUS – Keep Yellowstone Nuclear Free

NOTICE IS HEREBY GIVEN of the Director's Decision to AFFIRM the Hazardous Waste Treatment and Storage Partial Permit for Units at INEEL Bldgs. CPP 659/1659 (Permit). Petitioner's challenge to the Permit is hereby DENIED in all parts.

NOTICE IS ALSO GIVEN of the Director's Decision to DENY, the Department of Energy's MOTION TO STRIKE.

The grounds for the Director's decision are as follows:

INTRODUCTION AND PROCEDURE

On March 29, 1996 the Idaho Department of Environmental Quality (DEQ) received a partial Part B permit application for hazardous waste treatment and storage units at INEEL Buildings CPP 659/1659. This application was later withdrawn. On January 2, 1997 the DEQ received a resubmitted, partial Part B permit Application for hazardous waste treatment and storage units at INEEL Buildings CPP 659/1659. On February 14, 2000 the DEQ determined the application complete. On September 21, 2000, DEQ requested additional flood plain information from DOE-Idaho. On December 4, 2000 Petitioner David McCoy (hereinafter Petitioner) wrote the DEQ and requested that the public comment period on the permit be reopened to review any additional information regarding floodplain. On December 20, 2000 the DEQ, through the Idaho Attorney General's Office responded to the request indicating that the public comment period might be reopened upon review of the additional information since the new information might require changes to the permit. On January 18, 2001, DOE-Idaho submitted additional flood plain information. On February 12,

2001 the DEQ wrote the Department of Energy again and requested additional information regarding floodplain mapping pursuant to IDAPA 58.01.05.008 [40 CFR § 271.14(b)(11)(iii)]. On May 18, 2001, DOE-Idaho submitted additional information to the DEQ regarding flood plain mapping. Subsequently it was determined that additional public comment was not necessary since the information submitted did not require changes to the permit.

On October 5, 2001, the DEQ issued a partial permit for hazardous waste treatment, storage and disposal units at the INEEL, buildings CPP 659/1659. On November 5, 2001, Petitioner, David McCoy filed a petition for review of said permit decision pursuant to IDAPA 58.01.05.013 [40 CFR § 124.19]. The petition raised numerous grounds for appeal.

On December 14, 2001, the Director of the Department of Environmental Quality issued an Order Granting Limited Review of the permit pursuant to IDAPA 58.01.05.013 [40 CFR § 124.19(c)]. The order limited review of the petition to the following issue: ***Whether new information submitted by the Department of Energy reflecting flood plain mapping requires changes in the permit.*** All other matters raised by the Petition were denied. The Order Granting Limited Review established a briefing schedule and the right of interested persons to file Amicus Briefs in support of or in opposition to the Permit based upon the limited grounds for review.

On January 11, 2002, Petitioner filed his Appellant Brief. On January 16, 2002 and January 22, 2002, respectively, Environmental Defense Institute (EDI) and Keep Yellowstone Nuclear Free (KNYF) filed Amicus Briefs challenging the issuance of the permit. On February 4, 2002, the Department of Energy (DOE) filed a response brief. Simultaneously, the DOE filed a motion to strike portions of the Petitioner's and Amicii' briefs. On February 6, 2002 petitioner responded to the DOE's motion to strike. On February 20, 2002, the Idaho DEQ Hazardous Waste Permitting Bureau submitted a Response Brief to the Hearings Coordinator.

I have considered all of the briefs submitted by all of the parties in rendering this decision.

DECISION AND ORDER

1. Governing Law:

This is a proceeding pursuant to IDAPA 58.01.05.013 which incorporates by reference the provisions of 40 CFR § 124.19. The combined effect of these two sections provides for a right of appeal to the Director of the Department of

Environmental Quality regarding any permit decision for a Hazardous Waste Treatment Storage and Disposal Facility (TSDF).[1]

The Order Granting Limited Review established that the sole issue for review was whether new information related to floodplain mapping submitted by DOE required changes to the permit. The requirements for a permit applicant related to facility location and floodplain issues are set forth in 40 CFR § 270.14(b)(11)(iii-iv).

40 CFR § 270.14(b)(11)(iii) provides:

> Owners and operators of all facilities shall provide an identification of whether the facility is located within a 100 year floodplain. This identification must indicate the source of data for such determination and include a copy of the relevant Federal Insurance Administration (FIA) flood map, if used, or the calculations and maps used where an FIA map is not available. Information shall also be provided identifying the 100 year flood level and any other special flooding factors (e.g., wave action) which must be considered in designing, constructing operating or maintaining the facility to withstand washout from a 100-year flood.

40 CFR § 270.14(b)(11)(iv) provides:

> Owners and operators of facilities located in the 100-year floodplain must provide the following information:
>
> > (A) Engineering analysis to indicate the various hydrodynamic and hydrostatic forces expected to result at the site as consequence of a 100-year flood.
> > (B) Structural or other engineering studies showing the design of operational units (e.g., tanks, incinerators) and flood protection devices (e.g., floodwalls, dikes) at the facility and how these will prevent washout.
> > (C) If applicable, and in lieu of paragraphs (b)(11)(iv)(A) and (B) of this section, a detailed description of procedures to be followed to remove hazardous waste to safety before the facility is flooded, including:
> > > (1) Timing of such movement relative to flood levels, including estimated time to move the waste, to show that

[1] On March 15, 2002, subsequent to the filing of this appeal, IDAPA 58.01.013 and its associated definitions were amended to provide for appeal to the Idaho Board of Environmental Quality. The Amendment was not made retroactive. Accordingly, this proceeding is before the Director of the Department of Environmental Quality.

such movement can be completed before floodwaters reach the facility.
(2) A description of the location(s) to which the waste will be moved and demonstration that those facilities will be eligible to receive hazardous waste in accordance with the regulations under Parts 270, 271, 124, and 264 through 266 of this chapter.
(3) The planned procedures, equipment, and personnel to be used and the means to ensure that such resources will be available in time for use.
(4) The potential for accidental discharges of the waste during movement.

Review of this petition and of the original permit application is governed by these provisions.

2. Department of Energy's Motion to Strike.

The Department of Energy has moved to strike certain documents attached to Petitioner's and Amicii' briefs. DOE argues that these submissions violate the Idaho Administrative Procedure Act, I.C. § 67-5240. The DOE further argues that these submissions are outside the scope of review, are unauthenticated and are hearsay. Petitioner McCoy responds that Administrative Procedures Act definition of "contested cases" are not applicable to this proceeding under IDAPA 58.01.05.013. Rather, McCoy contends the Rules of Administrative Procedure before the Board of Environmental Quality, IDAPA 58.21. are applicable and can allow for the submission of evidence which does not meet the requirements of the Idaho Rules of Evidence.

Neither position is entirely correct. This is not a "contested case" as defined by Idaho Code § 67-5240. Nor is this a proceeding subject to the Rules of Administrative Procedure Before the Board of Environmental Quality IDAPA 58.21 et. seq.

Pursuant to IDAPA 58.01.05.13 the procedures governing appeals of Hazardous Waste Management Act permits are governed by the procedures set forth in 40 CFR § 124.19. Under these provisions no specific prohibition is placed upon the introduction of evidence nor is there any requirement that evidence offered comply with the Rules of Evidence applicable in Federal or State court. Rather, this provision instructs the Director to review the petition and any briefs and determine whether to affirm the permit, reject the permit or modify the permit. Under these rules therefore, the Director has discretion to review any materials he deems relevant and to predicate his decision on matters considered by him.

The materials submitted by Petitioner and Amicii have been reviewed. I have determined that they are not relevant to the scope of review as set forth in the

Order Granting Limited Review. Rather than strike them from consideration, I have reviewed them and find them unpersuasive on the issue before me.

3. Petitioner and Amicii raise issues that are outside the scope of review.

Despite the limited scope of review granted by the Order Granting Limited Review, Petitioner and Amicii, continue to assert issues that are beyond the scope of review. These include *inter alia*: The location, condition and history of the MacKay Dam, (See Appellant's Brief p. 2); the Teton Dam failure of 1976 (Appellant's brief p. 3); flood issues at WROC (Appellant's brief p. 5); flood issues at TAN (Appellant's brief p. 5); potential "floating" of High Level Waste Tanks in flood conditions (Appellant's brief p. 10); wetlands issues under 10 CFR § 1022 (Appellant's brief p. 17); "functional equivalency" of National Environmental Policy Act (NEPA) review (Appellant's Brief p. 9); Groundwater contamination mapping under 40 CFR 270.14(c); Percolation pond design (Appellant's brief p. 20); ICDF Landfill design and location (Appellant's brief p. 9; Amicus EDI brief p. 9); shallow wells into the vadose zone (Amicus KNYF Brief); super-compaction of radioactive waste (Amicus EDI Brief p. 4). These issues are beyond the scope of limited review granted by the Director's Order Granting Limited Review and will not be addressed. Furthermore these issues were either not raised during the public comment period on this permit and are thus barred by IDAPA 58.01.05.13 (40 CFR 124.19) or were responded to by the Department in its response to comments.

4. Conflicting flood plain information is not grounds for denial of the Permit.

Much of petitioner and the Amicii briefs are directed toward conflicting hydrogeologic studies that have been done of the Big Lost River and flood potentialities from a catastrophic failure of Mackay Dam. These include Koslow, K.N., Van Haaften, D.H. FLOOD ROUTING ANALYSIS FOR A FAILURE OF MACKAY DAM, June 1986, Idaho High Level Waste Environmental Impact Statement, December 1999 and a 1998 United States Geologic Survey (USGS) (Berenbrock and Kjelstrom) study. These studies and the conclusions made by various hydrogeologists studying the Big Lost River floodplain do not equate to a deficiency in the permit application. While DOE-Idaho initially requested more time to resolve questions posed by the conflicting studies, DEQ insisted that DOE promptly resolve the issues and submit the information required by 40 CFR § 270.14(b)(11)(iii-iv). DOE Idaho did so by referencing the previously submitted 1986 Koslow & Van Haaften, study and a flood plain map prepared based on this study. In response to questions by DEQ concerning conflicts between the 1986 Koslow and Van Haaften study and the 1998 USGS study, DOE-Idaho provided supplemental information on May 18, 2001. This supplemental information explained how the 1986 Koslow and Van Haaften study was FIA equivalent and explained that the 1986 Koslow and Van Haaften study was, in fact, more conservative than the 1998 USGS study.

The permit application and the additional information submitted by DOE Idaho in response to inquiries by the Department indicate that the map submitted by DOE was a Federal Insurance Agency (FIA) equivalent flood plain map as required by 40 CFR 270.14(b)(11)(iii). The petitioner has failed to identify any deficiency related to the mapping and or its compliance with FIA techniques. Rather petitioner merely points to another study indicating a differing flood elevation determination. Petitioner, then opines that this study is more accurate than the study submitted by DOE and criticizes the DOE's basis for reliance on the 1986 Koslow and Van Haaften study. The Petitioner and Amicii lack any qualification to render any opinion concerning these studies and any opinions or criticisms leveled by the Petitioner or Amicii lack foundation. The flood plain mapping submitted by DOE-Idaho satisfies the requirements of 40 CFR 270.14(b)(11)(iii) by determining whether or not the units are within the 100-year floodplain, the flood elevation and any special features. The Petitioner has failed to point out any information requiring a change in the permit.

5. Certification of the information in the application is sufficient.

Petitioner and Amicii also complain about the certification of the flood plain information arguing that a disclaimer on the FIA equivalent map submitted by DOE Idaho makes it impossible for DOE to properly certify the information as required by 40 CFR 270.11(d)(1). The notation referenced by the petitioner and Amicii, states:

> The flood elevation indicated in this report and on this map is considered by DOE to be interim, pending issuance of a final floodplain determination under 10 CFR 1022.

The disclaimer on the map does not affect the certification of DOE Idaho and its contractor Bechtel. The purpose of the certification requirement is for the individual submitting the information to take responsibility for the information submitted and to assure that they have reviewed the information for its accuracy. The above quoted language does not indicate that the information contained in the map is not true accurate and complete. At best this language indicates an intent on the part of DOE to complete additional required studies and supplement the information at a later date. The fact that DOE Idaho and Bechtel have certified that they have reviewed the information supporting the map and believe it to be true accurate and complete is sufficient to satisfy the requirements of 40 CFR 270.11.(d)(1).

6. A site-wide topographic map has been provided.

Petitioner also complains that a site-wide topographic map was not provided as required by IDAPA 58.01.05.012 (40 CFR § 270.14(b)(19)). A site-wide topographic map for the entire INEEL has been provided and is contained in Volume 3 of the INEEL Partial permit.

7. The permit application did not need to include information under 40 CFR 270.14(b)(11)(iv)(C).

Petitioner also contends that the application for the Volume 18 permit was deficient because DOE Idaho failed to submit information fulfilling the requirements of 40 CFR § 270.14(b)(11)(iv)(C). This information was not required because DOE submitted information satisfying the requirements of 40 CFR § 270.14(b)(11)(iv)(B). The information submitted shows that the buildings housing the units are designed to withstand washout in the event of a 100-year flood and the resulting hydrostatic and hydrodynamic forces expected during such an event.

8. Speculation about potential failure of control devices does not constitute grounds for modification of the permit.

Petitioner spends a great deal of time in his brief speculating about potential failures of various control measures and water-tight barriers. Petitioner offers no empirical evidence demonstrating that these measures will fail under a flood scenario. In the absence of anything more than speculation, no modifications to the permit are required.

CONCLUSION

In summary, the petition fails to specify any required changes to the permit as set forth by the Order Granting Limited Review. The petitioner and Amicii fail to support their challenge to issuance of the permit with more than speculation and conjecture. DOE Idaho's application and subsequent information satisfy the requirements of 40 CFR § 270.14(b)(11)(iii-iv). Accordingly, the Permit is affirmed and the petition is denied in all respects.

SO ORDERED.

DATE this 15th day of May, 2002

G. Stephen Allred
Director

STATE OF IDAHO
DEPARTMENT OF
ENVIRONMENTAL QUALITY

1410 North Hilton • Boise, Idaho 83706-1255 • (208) 373-0502

Dirk Kempthorne, Governor
C. Stephen Allred, Director

Oct. 25, 2001

Mr. Dave Wessman
DOE-Idaho Operations Office
850 Energy Drive
Idaho Falls, Idaho 83401-1563

SUBJECT: HWMA/RCRA Part A Permit Application, Volume I, Book 1, Rev. September, 2001 for the Idaho National Engineering and Environmental Laboratory, EPA ID No. ID4890008952.

Dear Mr. Wessman;

The State of Idaho Department of Environmental Quality, in accordance with IDAPA 58.01.05.012 [40 CFR 270.13] and IDAPA 58.01.05.013 [40 CFR 270.72], has reviewed DOE-ID's request to modify the HWMA/RCRA Part A Permit Application for the Idaho National Engineering and Environmental Laboratory.

Based on this review, the DEQ hereby concurs with and approves this modification.

If you have any questions or comments, please contact Gary Adamson at (208) 373-0316

Sincerely,

Brian R. Monson
Hazardous Waste Program Manager
Waste Management & Remediation Division

BRM:ab c:\...\Brian\Corr\Vol1, Book 1 Sept. 01 Approval

cc: J. Hunt, EPA Region 10
R. H. Guymon, BBWXT
R. Owen, IFRO
K. Trever, INEEL Oversight
COF
INppa

CCN CFL-1 Rugan Bodmer File

CCN 21417

STATE OF IDAHO
DEPARTMENT OF
ENVIRONMENTAL QUALITY

1410 North Hilton • Boise, Idaho 83706-1255 • (208) 373-0502

Dirk Kempthorne, Governor
C. Stephen Allred, Director

MAY 2001
RECEIVED
Ron H. Guymon

April 25, 2001

Mr. Dave Wessman
Idaho Operations Office
Department of Energy
850 Energy Drive
Idaho Falls, Idaho 83401-1563

SUBJECT: HWMA/RCRA Part A Permit Application, Volume I, Book 1, Rev. March 2001 for the Idaho National Engineering and Environmental Laboratory, EPA ID No. ID4890008952

Dear Mr. Wessman;

The State of Idaho, Department of Environmental Quality, in accordance with IDAPA 58.01.05.012 [40 CFR 270.13], has reviewed Department of Energy's request to modify the HWMA/RCRA Part A Permit Application for the Idaho National Engineering and Environmental Laboratory.

Based on this review, the DEQ hereby approves this modification.

If you have any questions or comments, please contact Mr. Gary Adamson at (208) 373-0316

Sincerely,

Brian R. Monson

Brian R. Monson, HW Program Manager
Waste Management and Remediation Division

BRM\GA:ls \Doe\2001\2001 Mod Approval

cc: J. Hunt, EPA Region 10
R. H. Guymon, BBWXT
R. Owens, IFRO
K. Trever, INEEL Oversight
COF
INppa 5

STATE OF IDAHO
DEPARTMENT OF
ENVIRONMENTAL QUALITY

1410 North Hilton • Boise, Idaho 83706-1255 • (208) 373-0502

Dirk Kempthorne, Governor
C. Stephen Allred, Director

April 23, 2001

David L. Wessman
DOE - Idaho Operations Office
850 Energy Drive
Idaho Falls, ID 83401-1563

Re: Operational Temperature Limit on Process Equipment Waste Evaporator (PEWE) Operations at the Idaho Nuclear Technology and Engineering Center (INTEC), Idaho National Engineering and Environmental Laboratory (INEEL), EPA ID No. ID4890008952

Dear Mr. Wessman:

This letter is in response to your request that the Idaho Department of Environmental Quality (DEQ) rescind the operating condition imposed via the August 24, 2000 Part A Permit Modification Approval for tank VES-WL-111. The approval condition stated "The temperature of the evaporator liquid is controlled below the operating limit (110°C) as to prevent the formation of unstable chemical compounds."

Prior to the final submittal of an interim status request (dated June 21, 2000) for tank VES-WL-111, DEQ had informed the Department of Energy (DOE) on several occasions that such a request for a new or existing tank system must include information whether or not the tank can meet the requirements of IDAPA 58.01.05.009 [40 CFR §265]. The provision in IDAPA 58.01.05.009 [40 CFR §265.13(a)(1)] stated "*Before an owner or operator treats, stores, or disposes any hazardous waste . . . he must obtain a detailed chemical and physical analysis of a representative sample of the waste. . . .*". In the final interim status request for tank VES-WL-111, one of DOE's responses to this requirement indicated that characterizing waste prior to acceptance at the PEWE, and operating the PEWE within standard operating parameters eliminates the need to sample wastes (bottoms) held in VES-WL-101 (and eventually VES-WL-111) prior to acceptance and transfer to the INTEC Tank Farm Facility. Section D of the draft PEWE Part B Permit Application, dated July 20, 2000, also suggested that the evaporator liquid is controlled below 110°C because it is possible to form unstable chemical compounds at temperatures higher than 110°C. Therefore, the DEQ observed the necessity to place the above condition in the November 20, 2000 interim status approval for tank VES-WL-111 to ensure that no unstable chemical compounds enter the tank.

Subsequent to the interim status conditional approval for tank VES-WL-111, DOE transmitted a position paper, dated November 2, 2000, requesting that the DEQ rescind the operating condition. Additional information was received January 31, 2000. The two submittals appear to indicate that:

- A significant margin of safety has been established, as per INTEC Technical Standard 4.2 A2, and applied through past and present operations of the PEWE to prevent the formation of unstable chemical compounds.

- The material of construction of tank VES-WL-111, stainless steel type -340L, is appropriate alloy for chemical environments within the INTEC Waste Management System.

The DEQ has carefully reviewed both submittals and hereby rescinds the first operating condition in the Part A Permit Modification Approval for tank VES-WL-111, provided that the PEWE is and will be operated as per INTEC technical standards and procedures. The operating temperature of the PEWE will be further addressed via the PEWE Part B Permitting process.

If you have any questions, please contact Vivien Hall at (208) 373-0137.

Sincerely,

Brian R. Monson
Hazardous Waste Program Manager
Waste Management and Remediation Division

BRM:VSH:sjt H:\DATA\WP61\PAUL_W\V_HALL\PEWE OpTemp.doc

cc: Jeff Hunt, EPA Region 10
Kathleen Trever, INEEL Oversight
Rensay Owen, Idaho Falls Regional Office
Ronald H. Guymon, BBWI
INppa
TSE/CE Reading File

STATE OF IDAHO
DEPARTMENT OF
ENVIRONMENTAL QUALITY

CCN # 16339

1410 North Hilton • Boise, Idaho 83706-1255 • (208) 373-0502

Dirk Kempthorne, Governor
C. Stephen Allred, Director

December 4, 2000

Donald N. Rasch
DOE - Idaho Operations Office
850 Energy Drive
Idaho Falls, Idaho 83401-1563

Re: Operational Temperature Limit on Process Equipment Waste Evaporator (PEWE) Operations at the Idaho Nuclear Technology and Engineering Center (INTEC), Idaho National Engineering and Environmental Laboratory (INEEL), EPA ID No. ID4890008952

Dear Mr. Rasch:

The Idaho Department of Environmental Quality (IDEQ) has reviewed INEEL's position paper regarding the operating condition imposed via the August 24, 2000 Part A Permit Modification Approval for tank VES-WL-111. In the cover letter to the DOE's position paper, you request that IDEQ rescind the approval condition stating "The temperature of the evaporator liquid is controlled below the operating limit (110°C) as to prevent the formation of unstable chemical compounds."

The PEWE system undergoes alarm and automatic steam shut-off, via the Distributive Control System for the two evaporators (VES-WL-129 and VES-WL-161) at 110°C. The draft Section D of the PEWE Part B Permit Application, dated July 20, 2000, indicates that the evaporator liquid is controlled below 110°C because it is possible to form unstable chemical compounds at temperatures higher than 110°C. In addition, the position paper also indicates that INTEC Waste Operations has established 110°C as the Operating Limit to eliminate the possibility of an organic-nitric acid explosion and scale formation. Therefore, it is DEQ's understanding the condition being placed on the Part A Permit Modification Approval for tank VES-WL-111 is consistent with established operational procedures for the PEWE system. The INEEL's position paper and the INTEC Technical Standard (TS) 4.2A2 appear to indicate that if the temperature of the evaporator liquid rises above 110°C, the automatic steam shut-off should activate, therefore, the PEWE should no longer be in an operating mode.

The DEQ understands that the temperature may rise for a short period of time once the steam supply is cut off. However, the INEEL must provide an explanation of how the temperature may keep rising above 120°C if the steam supply has been shut off. Based upon the information on all waste inputs to the PEWE, the INEEL must also identify all potential thermal decomposition and unstable chemical compound formation activities and the effects of chloride and nitric acid

attacks on Nitronic 50 (the material of construction of both evaporators), when the liquid temperature gets above 110°C.

If you have any questions, please contact Vivien Hall at (208) 373-0137

Sincerely,

Brian R. Monson
Hazardous Waste Program Manager
Waste Management and Remediation Division

BRM:VH:sjt H:\DATA\WP61\PAUL_W\V_HALL\INEEL\PEWE limit.doc

cc: Jeff Hunt, EPA Region 10
Kathleen Trever, INEEL Oversight
Rensay Owen, Idaho Falls Regional Office
J.E. Rugg, BBWI
Ronald H. Guymon, BBWI
INppa
TSE/CE Reading File

STATE OF IDAHO
DEPARTMENT OF
ENVIRONMENTAL QUALITY

NOV 2 4 2000

1410 North Hilton • Boise, Idaho 83706-1255 • (208) 373-0502

Dirk Kempthorne, Governor
C. Stephen Allred, Director

November 14, 2000

CERTIFIED MAIL #7099 3220 0006 2681 1109

Mr. Dave Wessman
DOE-Idaho Operations Office
850 Energy Drive
Idaho Falls, Idaho 83401-1563

Mr. Fred Hughes
Advanced Mixed Waste Treatment Project
1970 East 17th Street, Suite 207
Idaho Falls, Idaho 83404

Mr. Paul Divjak
Bechtel BWXT Idaho, LLC
P.0. Box 1625
Idaho Falls, Idaho 83415

SUBJECT: Transfer of Operational Control of the RWMC TSA Interim Status Units from Bechtel BWXT Idaho, LLC to BNFL

Dear Mr. Wessman, Mr. Hughes, and Mr. Divjak:

This letter is regarding the October 3, 2000 request to modify the Part A Permit at the Idaho National Engineering and Environmental Laboratory, EPA ID No. 4890008952.

The State of Idaho, Department of Environmental Quality (DEQ), has reviewed DOE-ID's request to modify the HWMA/RCRA Part A Permit Application for the Idaho National Engineering and Environmental Laboratory PADS TSA-1/TSA-R, TSA-2 and TSA-RMF at the Transuranic Storage Area, Volume 1a. This modification transfers operational control from BBWI to BNFL.

Based on this review, the DEQ hereby approves this modification.

If you have any questions or comments, please contact Mr. Gary Adamson at (208) 373-0316

Sincerely,

Brian R. Monson, HW Program Manager
Waste Management & Remediation Division

BRM\GA:ls

cc: J. Hunt, EPA Region 10
R. Owens, IFRO
COF
D. D. Nishimoto, SAIC
K. Trever, INEEL Oversight
INpbp
INppa 5

STATE OF IDAHO
DEPARTMENT OF
ENVIRONMENTAL QUALITY

NOV 1 6 2000

1410 North Hilton • Boise, Idaho 83706-1255 • (208) 373-0502

Dirk Kempthorne, Governor
C. Stephen Allred, Director

November 9, 2000
CERTIFIED MAIL #7099 3220 0006 2681 1116

Donald N. Rasch
DOE - Idaho Operations Office
850 Energy Drive
Idaho Falls, ID 83401-1563

Re: Hazardous Waste Management Act/Resource Conservation and Recovery Act (HMWA/RCRA) Part A Permit Application Modification Request (PAMR) for the CPP-604 Process Equipment Waste (PEW) Feed/Storage & Treatment Tank VES-WL-132, Idaho National Engineering and Environmental Laboratory (INEEL), EPA ID No. ID4890008952

Dear Mr. Rasch:

The Department of Environmental Quality (DEQ) has reviewed your October 24, 2000 request increase the treatment capacity (T01) from 7,000 gallons/day to 28,000 gallons/day for tank VES-WL-132 located at the Idaho Nuclear Technology and Engineering Center (INTEC). Based on the information provided, DEQ concurs with the justification that, in accordance with IDAPA 58.01.05.012 [40 CFR §270.72 (2)], the increase is necessary due to a lack of other facilities providing available appropriate treatment, and to optimize PEW evaporator system performance which will, in turn, allow the INTEC High Level Liquid Waste Evaporator to run at maximum efficiency. The above-described PARM is hereby approved, and the INEEL HMWA/RCRA Interim Status Permit Application (Volume 1), maintained by the DEQ, has been revised.

If you have any questions, please contact Vivien Hall at (208) 373-0137

Sincerely,

Brian R. Monson
Hazardous Waste Program Manager
Waste Management and Remediation Division

BM:VH:sjt H:\DATA\WP61\PAUL_W\V_HALL\INEEL\WL132 approval.doc

cc: Jeff Hunt, EPA Region 10
Kathleen Trever, INEEL Oversight
Rensay Owen, Idaho Falls Regional Office
Ronald H. Guymon, BBWI
INppa
TS/CEE Reading File

STATE OF IDAHO
DEPARTMENT OF
ENVIRONMENTAL QUALITY

1410 North Hilton • Boise, Idaho 83706-1255 • (208) 373-0502

Dirk Kempthorne, Governor
C. Stephen Allred, Director

October 3, 2000

CERTIFIED MAIL #7099 3220 0006 2681 1062

Ms. Beverly Cook
Department of Energy Idaho Operations Office
850 Energy Drive
Idaho Falls, ID 83401-1563

SUBJECT: Final Determination on the Denial of the Waste Experimental Reduction Facility Incinerator Permit Application

Dear Ms. Cook:

The Department of Environmental Quality (DEQ) has reached a final decision to deny the Hazardous Waste Management Act (HWMA) Permit for the incinerator component of the Waste Experimental Reduction Facility (WERF) on the Idaho National Engineering and Environmental Laboratory (INEEL, EPA ID No. ID4890008952). This decision results from deficiencies in the application (and associated trial burn reports), and failures to correct these deficiencies.

The DEQ received three (3) comments during the public comment period. Two comments supported the proposed decision to deny the permit. The facility comments and the DEQ responses are enclosed.

In accordance with IDAPA 58.01.05.013 [40 CFR §124.19], any person who filed comments on the draft decision to deny the permit for the WERF Incinerator may request review of the permit decision. If there is no request for such review, the permit denial shall become effective November 2, 2000.

WERF Incinerator waste management operations must cease on the effective date of the permit denial. The Department of Energy has fifteen (15) days from the effective date to submit a closure plan for the WERF Incinerator, in accordance with IDAPA 58.01.05.009 [40 CFR § 265.112(d)(3)(i)].

Please contact Mr. Brian Monson at (208) 373-0502, if you have any questions regarding this decision.

Sincerely,

C. Stephen Allred
Director

CSA\BLE:ls [illegible]

Enclosure
cc: Catherine Massimino, EPA Region 10
Ron Guymon, Bechtel BWXT, LLC.
R. Owen, IFRO
INpwi 3
Darrell Early, Deputy AG, Office
Kathleen Trever, INEEL Oversight
COF

epartment of Environmental Quality • October 3, 2000 • For Immediate Release

NewsRelease

MEDIA CONTACT

■ **Bob Bullock**
(208) 373-0502

DOE Must Shut Down WERF Incinerator by Nov. 2, Says DEQ

BOISE — The Idaho Department of Environmental Quality (DEQ) has directed the U.S. Department of Energy (DOE) to stop operating an incinerator at the Idaho National Engineering and Environmental Laboratory (INEEL) by November 2, 2000.

The incinerator, which is used to treat hazardous wastes in low-level radioactive waste, is located at INEEL's Waste Experimental Reduction Facility (WERF) west of Idaho Falls.

DEQ has determined that DOE failed to provide the information necessary to permit the incinerator.

Because the incinerator was in place before hazardous waste regulations applied to the federal government, the facility has been operating under interim regulatory provisions while a permit application was prepared, submitted, and processed.

DOE submitted a hazardous waste treatment permit application for the WERF incinerator in 1992. Since that time, DEQ has worked with DOE to address application deficiencies and to evaluate the facility's ability to meet permitting requirements through trial burns.

As required by state regulations, DEQ published its intent to deny DOE's permit application for the facility in August and provided a 45-day comment period.

DEQ denied the permit because DOE did not fully correct application deficiencies and submit the information necessary to issue a permit.

"While environmental compliance at INEEL by DOE and its contractor has shown substantial improvement, the information submitted in this application did not establish that the WERF unit could meet requirements," said DEQ Director Steve Allred. "Therefore, the State has the responsibility to deny DOE's request for a permit to operate the facility. Without the State's approval, the unit cannot operate."

Unless DEQ's decision is appealed, state regulations require DOE to cease operations at the WERF on or before November 2, 2000. Failure to comply with this deadline may result in penalties of up to $10,000 per day per violation.

End

WERF Response to Comments

1. *Fact Sheet: Data from the 1986 WERF Trial Burn indicated the destruction and removal efficiency (DRE) for some runs exceeded 100% making it impossible to determine whether compliance with the 40 CFR Part 264 Subpart O DRE standard had been demonstrated.*

DOE Comment: It is important to note that the 1986 trial burn data were not used as a basis for permitting the WERF incinerator. The only DRE data that were corrected were those relating to the solid waste portion of the trial burn. Standard statistical analysis performed on the DRE data had shown that compliance with the DRE standard had been demonstrated with a probability of greater than 95%. Neither State nor federal regulations prohibited the data correction and statistical procedures applied. The liquid feed tests all met the minimum DRE requirement (>99.99%) without the need for data correction or statistical analysis. Therefore, the 1986 trial burn did demonstrate compliance with the 40 CFR 264 Subpart O DRE standards. The data derived from the 1997 trial burn is the basis for establishing operating conditions for the RCRA permit discussed in this notice.

DEQ Response: The 1986 Trial Burn was not the basis for the permitting decision. However, the 1986 Trial Burn, when combined with the rest of the permitting history described in the Fact Sheet, supports the DEQ determination (in accordance with IDAPA 58.01.05.013 [40 CFR §124.3(d)]) that the applicant has failed to correct deficiencies in the Part B Permit Application for the WERF Incinerator.

The US Environmental Protection Agency (EPA), the hazardous waste permitting authority at that time, determined that the 1986 Trial Burn was unsuccessful because it did not satisfy the DRE requirements and did not provide the necessary information to develop a hazardous waste incinerator operating permit. The EPA did not accept the data corrections and statistical analysis found in the DRE calculations of the 1986 Trial Burn Report. While the liquid feed appears to have met the DRE standard without correction, the solid feed did not. Therefore, the trial burn did not demonstrate that the WERF incinerator achieved the DRE standard for each waste feed, as required at 40 CFR §264.343(a)(1).

Neither the 1986 nor the 1997 Trial Burns provided the information required to form the basis for establishing operating conditions for a hazardous waste incinerator permit.

2. *Fact Sheet: During the first two low temperature trial burn runs, HCl emissions significantly exceeded the predicted HCl emission rate, calculated from the waste characterization data. This deviation resulted in Violation #132 in the August 25, 1997 Notice of Violation, issued by DEQ to DOE, for failure to adequately characterize the waste. Resolution of Violation #132 included additional waste*

analysis and training requirements which have not been fully incorporated in the application.

DOE Comment: The violation noted above was resolved via consent order negotiations (May 6, 1999, September 3, 1999, and September 10, 1999) and corrective measures were implemented into current operations at WERF. These include the addition of conservative waste feed cut offs (implemented March 1998), the addition real time analytical capability for measuring chlorine content in solid material (added in March 2000), and limiting the amount of chlorinated material that can be fed to the incinerator to 2 pounds per hour (implemented April 1998).

Under interim status there are no emission limitations for chlorine; however, the INEEL has administratively imposed and adhered to a 4 pound per hour HCl emission (feed rate controlled) standard, which is consistent with what would be expected in a RCRA Part B permit. A revision of the application was not done per DEQ's request that the INEEL not significantly revise the application until after the trial burn was completed and all associated issues resolved.

DEQ Response: IDAPA 58.01.05.009 [40 CFR §265.341(b)] requires that waste be analyzed to determine its halogen content. Exceeding the administrative emission standards for chlorine (a halogen) demonstrated that the facility did not adequately characterize the waste. During this time there have been two high HCl events (March 9-10, 1998 and the one described in the Fact Sheet) that resulted from inadequate or incorrect waste characterization or waste repackaging. The waste analysis plan in the Part B Application remains deficient.

Prior to the 1997 and 1998 Trial Burns, the DEQ had issued comprehensive Notices of Deficiency (see NOD's dated July 23, 1993, December 18, 1996, and June 5, 1998). DOE has failed to fully respond to these NOD's. In response to repeated submission of materials which were non-responsive or only partially responsive to the NOD's, the DEQ asked DOE to refrain from submitting revisions to the application which did not completely address all outstanding NOD items. Having repeatedly reviewed the WERF Part B Permit Application and having provided ample opportunity to provide a complete Part B Permit Application, the DEQ is under no obligation to provide another comprehensive NOD in response to yet another incomplete application.

The "associated issues" referenced in DOE's comment included DOE's pending decision on whether the unit would be upgraded to meet the MACT requirements. In June of this year, the DOE publicly announced that the WERF incinerator would be closed rather than upgraded to meet the MACT standards. Since June, the DOE has failed to submit a complete Part B Application.

Based upon DOE's repeated failure to provide a permit application that was both administratively and technically complete, the DEQ opted to exercise it's authority under IDAPA 58.01.05.013 [40 CER § 124.3(d)] to deny the permit for the WERF incinerator.

3. *Fact Sheet: To date, a waste repackaging protocol or standard operating procedure has not been incorporated in the Application.*

DOE Comment: The repackaging booth is located within the Mixed Waste Storage Facility (MWSF) at the Waste Reduction Operations Complex (WROC) and was originally to be permitted with the MWSF in a permit application separate from that of the incinerator. At the request of the DEQ (summary of Conference Call, August 7, 1998, and letter from DEQ to DOE, September 9, 1998), the repackaging booth was removed from the MWSF permit application and was to be included in the permit application with the incinerator. The addition of this unit into the incinerator permit application was to occur after the Notice of Deficiency on the WERF incinerator application was received from DEQ. As agreed to with DEQ, no significant revisions to the WERF permit application were to occur until the trial burn was completed, thus the repackaging booth has not been added to the permit application.

DEQ Response: The repackaging booth is not the only location where either packaging or repackaging of waste for incineration at WERF takes place. As identified in the Fact Sheet, the DEQ has repeatedly asked for a standard operating procedure for waste repackaging that would outline the WERF Waste Acceptance Criteria, and outline a process that would assure the repackaged waste meet this criteria. The requested documentation may exist but has not been provided to DEQ for review.

4. *Fact Sheet: The high temperature trial burn runs were repeated on August 19-24, 1998. During this time, the WERF incinerator was temporarily modified by placing plastic sheeting over the underfire air and primary combustion chamber flameport air inlets. These modified the operating conditions of the incinerator by changing the sources of combustion air. These modifications possibly affected the unit's capability to meet the regulatory performance standards. The Trial Burn Report made no mention of the modifications to the incinerator unit. The DEQ has concluded that modification of the equipment, using plastic sheeting, constituted a significant change in the design of the air inlets to the primary combustion chamber.*

DOE Comment: During the trial burn, representatives of EPA and DEQ met daily with INEEL personnel for pre-test and post-test meetings to discuss issues relating to the trial burn. At no time during these meetings was the issue of using plastic sheeting to control temperature brought up although the DEQ was aware of it. A Trial Burn Deviation Report, which did not

include the issue, was written by INEEL personnel and was approved by DEQ.

The WERF trial burn like all trial burns was designed to be conducted at the edge of the operating envelope of the incinerator. The trial burn is designed to show that the incinerator can meet the compliance standards even when operated under worst case operating conditions and on worst case feed streams. The EPA and DEQ required that WERF show compliance with the performance standards in the trial burn when operating both chambers at the highest temperature limits.

The high temperature trial burn was designed to show compliance at this abnormal operating condition. Normally, the incinerator is not operated at such high temperature conditions in the two chambers and the high temperature could only be maintained using artificial means. The plastic sheeting restricts air to the primary chamber, which in turn limits the amount of combustion which can occur in the primary chamber. As a result, unburned gases are carried from the primary chamber into the secondary chamber where they are burned. This serves to increase the secondary chamber temperature and cool the primary chamber. Even with the air restrictions in place, the incinerator passed the performance standards set out in the regulation and the approved trial burn plan.

During normal operations (i.e., when the incinerator is not being trial burn tested), operating at the high temperature limits of both chambers is not a goal and the plastic sheeting is not necessary or used. At normal operating conditions (without the plastic sheeting), airflow is improved, operating temperatures are more realistic, and incinerator performance is improved. The use of plastic sheeting was not a permanent modification and its implementation was only to accomplish the more extreme operating conditions of the high temperature trial burn.

DEQ and EPA representatives were aware of this practice being used to control temperatures during the trial burn, but did not indicate it as being a concern, nor did DEQ mention this as a concern in the Trial Burn NOD. As such, covering it in the Trial Burn Report was not deemed necessary.

DEQ Response: This comment raises multiple issues concerning the high temperature trial burn:

a) The EPA was not present at the 1998 High Temperature Burn and may have been unaware of the plastic sheeting.

b) The DEQ did not arbitrarily set the requirements for the high temperature trial burn. The requirements were established based on the DOE/DOE contractor proposed operating limits contained in the permit application. In fact, the DEQ and EPA questioned the applicant whether the high temperature limits were set too high.

c) The approved Trial Burn Plan did not describe the use of plastic sheeting.

d) Use of plastic sheeting was not identified in the September 21, 1998 LMITCO letter, summarizing the deviations approved in the field by DEQ staff. The October 7, 1998 DEQ approval letter approved only those deviations identified in the September 21 letter.

e) The Trial Burn Report should have described the use of the plastic. In addition, the Trial Burn Report should have provided an analysis and justification as to why results from a burn using the plastic are representative of burn conditions where the plastic is not used.

f) The DOE comment supports the DEQ position that the use of the plastic sheeting affected the WERF incinerator operations. The applicant acknowledges that these modifications affected the availability of oxygen, residence time, and operating temperatures of both combustion chambers. Yet the applicant claims this did not affect the unit's capability to meet the regulatory performance standards. The failed July 1997 High Temperature Trial Burn, conducted without the plastic, suggests otherwise.

g) The DEQ has not issued an NOD on the Trial Burn Report, only requested two (2) specific items of information.

The DEQ cannot establish permit conditions addressing the operating range of the WERF incinerator because the two trial burns, low and high temperature, were not conducted under the same operating configuration. Therefore, the Part B Permit Application remains deficient.

5. *Fact Sheet: Valid oxygen data was not collected during the high temperature trial burn to establish limits for this Group A parameter. Further, in accordance with IDAPA 58.01.05.009 [40 CFR 265.347(b)], the oxygen monitor must be checked daily for proper operation. The inspection schedule in the Application has not been revised to reflect daily operational checks of this instrument.*

DOE Comment: Daily operational checks and weekly calibration verifications of the oxygen monitor were implemented in WERF operating procedures following the trial burn. After the oxygen monitor was calibrated (date calibrated, August 24, 1998), one run of valid oxygen data was obtained to support the trial burn. After the monitor was calibrated, the bias of the meter was measured such that the data from the previous runs could be corrected. Therefore, valid oxygen data was obtained. This issue was covered more completely in a January 24, 2000, submittal to the DEQ in response to this same issue.

Furthermore, as mutually concluded in the last NOV negotiation and documented in the associated Consent Order dated January 11, 2000, 40 CFR 265.347(b) does not apply to the oxygen monitor in question and daily calibrations are not required. Revision of the application has not been done as yet because of the DEQ's request that WERF not significantly revise the application until after the trial burn.

DEQ Response: The oxygen monitor was not calibrated according to 40 CFR Part 60 standards on August 24, 1998. It was spot checked with two calibration gases; however, the results of this "calibration" were not included in the Trial Burn Report, as required by the Trial Burn Plan.

The need for determining the minimum oxygen concentration, to be established as a Group A automatic waste feed cut off parameter, was described in the January 29, 1996 NOD. Instruments utilized to generate or support operating data to be used for establishing permit conditions must be of a known and acceptable quality that is established for each test burn condition independently. This is true for instruments that are part of the incinerator system (e.g., thermocouples, pressure sensors, etc.) as well as instruments which are part of the stack sampling equipment (e.g., gas chromatographs, etc.). In order to use the oxygen data collected, the DEQ must make assumptions concerning the nature of the instrument's response curve. Therefore, the quality of the oxygen data collected is a matter for debate, especially when considered in light of the difficulties discussed in Comment 4 above.

The DEQ agrees that daily calibration of the oxygen monitor is not required for compliance with IDAPA 58.01.05.009 [40 CFR § 265.347(b)], as indicated by the dismissal of Violation #79 in the January 11, 2000 Consent Order. However, daily checks for proper operation of the instrument are required at IDAPA 58.01.05.009 [40 CFR §265.347(b)] and must be a part of any complete permit application. Further, additional checks for proper operation would be required whenever an operator indicates that the monitor does not appear to be functioning properly.

6. *Fact Sheet: The facility was required to perform a Screening Level Risk Assessment (SLRA) based on IDAPA 58.01.05.012 pursuant to EPA's policy that the permitting processes for hazardous waste combustors must address site-specific risks not otherwise addressed by existing regulation. A technically complete SLRA is necessary for the DEQ to develop a permit for the WERF incinerator.*

DOE Comment: The INEEL submitted the first plan for conducting a Screening Level Risk Assessment to DEQ in September 1993. This plan was revised in response to DEQ NODs from 1993 through 1999 in attempts to meet the requirements of new draft guidance as it evolved and was received from EPA via DEQ. Each version that was submitted was compliant with the draft guidance for SLRAs that was current at that time. Many of the NODs on the SLRA covered items were new guidance that was available only to the regulators in draft form. Over the entire period, the EPA published many versions of guidance and to date has not finalized the guidance for conducting risk assessments.

The DOE, in conjunction with EPA and interested state regulators and private companies, formed a working group as an offshoot of the National Technical Workgroup to attempt to address these issues for mixed waste combustors across the DOE complex. NTW was formed in 1992 as a clearinghouse for issues associated with mixed waste combustors and has been routinely supported by technical experts from the EPA, DOE, DOE contractors, State regulators as well as private companies such as ATG. The Idaho DEQ has been involved with NTW since its inception.

After the most recent version of the WERF SLRA was submitted to the DEQ as Appendix L of the 1997 WERF Trial Burn Report, and had been reviewed by the DEQ (NOD comments received June 1998), new risk assessment guidance was published in July 1998. In a teleconference, DEQ requested a "position paper" from DOE that would do two things: 1) describe what changes would be needed to bring the existing risk assessment up to the new guidance and 2) describe how the recently completed trial burn data set would be incorporated. The position paper was completed in accordance with the request and transmitted to the DEQ on January 20, 1999, (Klias McNeel letter KM-09-99). The above teleconference was documented in the letter.

No response has yet been received from the DEQ on whether the risk assessment changes and trial burn data proposed for use was acceptable. Work on an updated risk assessment was on hold until the INEEL received word from the DEQ that the proposals in the position paper were acceptable or not.

DEQ Response: The DEQ maintains the position that the facility has yet to develop an adequate Screening Level Risk Assessment Workplan (SLRAWP). DOE's claim that evolving guidance has prevented the development of a WERF SLRAWP is not acceptable. Whether or not written EPA guidance has been finalized, DOE has had ample opportunity to seek guidance from DEQ or EPA in order to complete an adequate SLRAWP. Other facilities have developed acceptable SLRAWPs (and the subsequent risk assessments) despite the evolving guidance. Consistent with the approach applied to other facilities to assure that relevant issues raised in new guidances are addressed and to minimize the impact to the permit process of addressing them, DEQ requested in a September 23, 1996 Notice of Deficiency that DOE include a SLRAWP with its Trial Burn Report. An approved SLRAWP would have established the bases and assumptions applicable to assessment of risk posed by WERF operations. Rather than submitting a SLRAWP for approval, DOE opted to perform a risk assessment which failed to address key issues (e.g. radiological risk, ecological risk, list of contaminants).

After seven (7) years and multiple NODs, the facility and DEQ have not agreed on basic items such as the list of contaminants of potential concern, radionuclides

of potential concern, exposure scenarios, or the components to the ecological risk assessment. By its continued failure to satisfy the appropriate requirements, DOE has demonstrated that an acceptable risk assessment cannot be completed in a timely manner. Without an acceptable risk assessment, the DEQ can not develop a hazardous waste permit for the WERF incinerator.

Therefore, although DEQ did not develop a formal response to the Position Paper, based upon DOE's repeated failure to provide a permit application that was both administratively and technically complete, the DEQ opted to exercise its authority under IDAPA 58.01.05.013 [40 CFR § 124.3(d)] to deny the permit for the WERF incinerator.

7. **DOE Conclusion: In conclusion, the INEEL believes it has consistently responded to all of DEQ's requests for additional information on the WERF incinerator permit application within the timeframes established by DEQ. The INEEL's responses to NOD's and for additional information were sufficient for DEQ to continue the permitting process and approve a trial burn. A trial burn has been conducted that showed the incinerator meets all of the performance standards of RCRA for incinerators. As a result of the NODs, NOVs, and other requests from the DEQ, many new operating procedures and other record keeping activities have been implemented at WERF. The INEEL believed that any additional information required in the Part B would have been incorporated as part of the permitting process (i.e., permit modification to the WROC/TAN permit), which also would have included the completion of the SLRA.**

The INEEL believes that it has responded properly and timely to all of DEQ's requests and done its part in keeping the WERF permitting process moving. Therefore, INEEL believes that the lack of a complete Part B application is not a justifiable basis for denial of the permit.

DEQ Response: While it appears that the incinerator performance standards may have been met for both the low and high temperature burns, the burns were not conducted with the same incinerator configuration. The DEQ is unable to develop operating conditions for a hazardous waste permit because the two data sets are not comparable. By definition, a successful trial burn must provide the data necessary to develop a hazardous waste permit.

DOE's belief "that the lack of a complete Part B Application is not a justifiable basis for denial of the permit" is contrary to the provisions of IDAPA 58.01.05.013 [40 CFR § 124.3(d)] and IDAPA 58.01.05.012 [270.10(e)(5)], which allows for permit denial "if an applicant fails to correct deficiencies in the application," and termination of interim status if an applicant fails to "furnish in full the information required by the Part B Application."

CCN00-013056

STATE OF IDAHO
DEPARTMENT OF
ENVIRONMENTAL QUALITY

1410 North Hilton • Boise, Idaho 83706-1255 • (208) 373-0502

SEP 2000
RECEIVED
Ron H. Guymon

Dirk Kempthorne, Governor
C. Stephen Allred, Director

CERTIFIED RETURN RECEIPT # 7099 3220 0006 2680 9885

August 24, 2000

Donald N. Rasch
DOE - Idaho Operations Office
850 Energy Drive
Idaho Falls, Idaho 83401-1563

RE: Hazardous Waste Management Act (HWMA)/Resource Conservation and Recovery Act (RCRA) Part A Permit Modification Request for the Process Equipment Waste Evaporator (PEWE) System Tanks, VES-WL-111 and VES-WL-101, at the Idaho Nuclear Technology Engineering Center (INTEC), Idaho National Engineering and Environmental Laboratory (INEEL), EPA ID No. ID48900089952

Dear Mr. Rasch:

The Department of Environmental Quality (DEQ) has reviewed your June 21, 2000 request to add PEWE bottom tank VES-WL-111 as an interim status tank storage unit (S01) and a tank treatment unit (T01), and also to add T01 code for PEWE bottoms VES-WL-101. DOE also requested to redesignate tank VES-WL-101 from the CPP-604 Tank Farm tanks to the CPP-604 PEW Feed/Storage and Treatment Tanks, in the HWMA/RCRA Part A permit, Volume 1.

Based on the information provided, it appears that VES-WL-111 meets the interim status requirements of IDAPA 58.01.05.009 [40 CFR §265, Subpart J]. DEQ also concurs with the justification that, in accordance with IDAPA 58.01.05.012 [40 CFR §270.72 (a) (3) (ii)], the modification for VES-WL-101 is necessary for proper storage of waste and to prepare the waste for future treatment. The redesignation of VES-WL-101 will aid in determining boundaries for the PEWE system and the CPP-604 Tank Farm tank system. Therefore, the above requests are hereby approved subject to the following conditions:

- The temperature of the evaporator liquid is controlled below the operating limit (110°C) as to prevent the formation of unstable chemical compounds.
- DOE shall revise the Piping and Instrumentation Diagram (P&ID) for VES-WL-111 to reflect RCRA-regulated activities, and submit the revised P&ID to DEQ.

The Part A Permit Application, Revision April 2000, will be added to the copies of the INEEL HMWA/RCRA Part A, Volume 1, maintained by the DEQ.

If you have any questions, please contact Vivien Hall at (208)373-0137.

Sincerely,

Brian Monson
Hazardous Waste Program Manager
Waste Management and Remediation Division

BM:VH:sjt H:\DATA\WP61\PAUL_WV_HALL\T101-111.WPD

cc: Jeff Hunt, EPA Region 10
Kathleen Trever, INEEL Oversight,
Rensay Owens, Idaho Falls Regional Office
R.H. Guymon, BBWI
INppa
Technical Services Reading File

CCN 00-012434

STATE OF IDAHO
DEPARTMENT OF
ENVIRONMENTAL QUALITY

1410 North Hilton • Boise, Idaho 83706-1255 • (208) 373-0502

Dirk Kempthorne, Governor
C. Stephen Allred, Director

AUG 2000
RECEIVED
Ron H. Guymon

August 8, 2000

Donald N. Rasch
DOE - Idaho Operations Office
850 Energy Drive
Idaho Falls, ID 83401-1563

RE: Page Change out for the Part A Permit Application for the Idaho National Engineering and Environmental Laboratory, Volume 1, Book 1, January 2000 Revision, EPA ID No. ID4890008952

Dear Mr. Rasch:

The Department of Environmental Quality (DEQ) has reviewed your July 13, 2000 letter requesting an editorial correction (clarification of the location of the NWCF container storage area) for the INEEL, Volume 1, Book 1, January 2000 Revision.

Supplement B to Items XII and XIII for the Idaho National Technology and Engineering Center - New Waste Calcining Facility high-efficiency particulate air Filter Storage (page 25) must be revised to reflect actual operating conditions. Based on review of the page change and supplemental information provided, the DEQ has determined the requested change is acceptable. Please transmit three (3) copies (without strikeout) of the page change out for our copies of the Part A Permit Application.

If you have any questions, please contact Vivien Hall at 208-373-0137.

Sincerely,

Robert E. Bullock
Hazardous Waste Permit Coordinator
Waste Management & Remediation Program Office

REB/VSH:sjt H:\DATA\WP61\PAUL_W\V_HALL\V1PGCHG.WPD

cc: Jeff Hunt, EPA Region 10
R. H. Guymon, BBWI
Rensay Owen, IFRO
INppa
COF

STATE OF IDAHO
DIVISION OF
ENVIRONMENTAL QUALITY

1410 North Hilton • Boise, Idaho 83706-1255 • (208) 373-0502

Dirk Kempthorne, Governor
C. Stephen Allred, Administrator

April 3, 2000

Richard C. Cullison
DOE - Idaho Operations Office
850 Energy Drive
Idaho Falls, ID 83401-1563

RE: Hazardous Waste Management Act (HWMA)/Resource Conservation and Recovery Act (RCRA) Part A Permit Application for the Idaho National Engineering and Environmental Laboratory (INEEL), Volume 1, Books 1 and 2 Revision January, 2000, EPA ID No. ID4890008952.

Dear Mr. Cullison:

This letter is in regard to the HWMA/RCRA Part A Permit Application for the INEEL, Volume 1, Books 1 and 2 Revision January, 2000. Based on the DEQ review of the information submitted January 24, 2000, the Permit Application is hereby approved.

If you have any questions concerning this matter, please contact Vivien Hall at 208-373-0137.

Sincerely,

Katherine Kelly, Administrator
State Waste Management and Remediation Program

KK\REB\VSH:sjt C:\HALL\JAN00V1.WPD

cc: Jeff Hunt, EPA Region 10
Dave Hutchinson, BBWI
Kathleen Trever, INEEL Oversight
Rensay Owen
INppa
TSCE Reading File

STATE OF IDAHO
DIVISION OF
ENVIRONMENTAL QUALITY

1410 North Hilton • Boise, Idaho 83706-1255 • (208) 373-0502

Dirk Kempthorne, Governor
C. Stephen Allred, Administrator

March 2, 2000

Mr. Don Rasch
DOE - Idaho Operations Office
850 Energy Drive
Idaho Falls, ID 83401-1563

RE: Proposed Sorting and Segregation Activities at CPP-1617 Located on the INEEL, EPA ID# ID4890008952

Dear Mr. Rasch:

The Division Of Environmental Quality (DEQ) has reviewed the February 18, 2000 white paper, describing DOE's position that the sorting and segregation of debris to take place at CPP-1617 does not constitute treatment.

As described there are to be two (2) phases associated with the sorting and segregating activities Phase I, the burn boxes, will not be opened unless additional sampling is required. Phase II involves opening approximately 1500m³ of containerized hazardous/mixed debris and sorting, segregating, then recontainerizing the debris.

The DEQ concurs with DOE's interpretation of the regulations that the activities described are not treatment. The DEQ does have concerns about the Phase II activities. While the activities as described do not constitute treatment, the additional handling of the hazardous/mixed debris increases the possibility of a release occurring. Therefore, in accordance with IDAPA 16.01.05.009 [40 CFR 265.54(c)], the Contingency Plan must be revised to address these activities.

If you have any questions/comments, please contact Ms. Beth McPherson at (208) 373-0502.

Sincerely,

Robert E. Bullock
Hazardous Waste Permit Coordinator
Waste Management & Remediation Prg. Office

REB\BAM:ls [illegible]

cc: Jeff Hunt, EPA Region 10
K. Trever, INEEL Oversight
N. Brooks, DOR-ID
INppbdm
Ransay Owen, IFRO
COF

STATE OF IDAHO
DIVISION OF
ENVIRONMENTAL QUALITY

1410 North Hilton • Boise, Idaho 83706-1255 • (208) 373-0502

Dirk Kempthorne, Governor
C. Stephen Allred, Administrator

February 14, 2000

HAND-DELIVERED February 15, 2000

Ms. Nichole Brooks
Department of Energy, Idaho Operations Office
850 Energy Drive
Idaho Falls, ID 83401-1563

RE: Hazardous Waste Management Act/Resource Conservation and Recovery Act, Part B Partial-Permit for the Test Area North (TAN) on the Idaho National Engineering and Environmental Laboratory (INEEL), EPA ID No. ID4890008952

Dear Ms Brooks:

The purpose of this letter is to transmit the above-referenced final Part B partial-permit. A public notice proposing the intent to issue a hazardous waste facility partial-permit appeared in The Idaho Statesman and The Post Register on December 1, 1999. The public comment period closed at 5:00 p.m. MST, January 14, 2000. The purpose of the public notice was to afford the public the opportunity to comment on the draft partial-permit.

During the public comment period, the DEQ did not receive any written comments or written requests for a public hearing. Therefore, in accordance with IDAPA 16.01.05.013 [40 CFR §124.15(a)], this letter is notification that the DEQ, acting under the authority of the Hazardous Waste Management Act of 1983, as amended, hereby approves the enclosed partial-permit for the TAN. Furthermore, in accordance with IDAPA 16.01.05.013 [40 CFR §124.15(b)(3)], the permit for the TAN shall be effective immediately.

If you have any questions, please contact Mr. Robert Bullock at (208) 373-0502.

Sincerely,

C Stephen Allred
Administrator

CSA\BAM:ls \ineel\letters\2000\tan.apr

Enclosures

cc Jeff Hunt, EPA Region 10 (w/enclosures)
Kliss McNeal, Bechtel BWXT
INpv 11-12
IFRO (w/enclosures)
Kathleen Trever, INEEL Oversight
COF

Printed on Recycled Paper

STATE OF IDAHO
DIVISION OF
ENVIRONMENTAL QUALITY

1410 North Hilton • Boise, Idaho 83706-1255 • (208) 373-0502

Dirk Kempthorne, Governor
C. Stephen Allred, Administrator

February 14, 2000

HAND-DELIVERED February 16, 2000

Ms. Nichole Brooks
Department of Energy, Idaho Operations Office
850 Energy Drive
Idaho Falls, ID 83401-1563

RE: Hazardous Waste Management Act/Resource Conservation and Recovery Act, Part B Partial-Permit for the Waste Experimental Reduction Facility/Waste Reduction Operations Complex (WERF/WROC) on the Idaho National Engineering and Environmental Laboratory (INEEL), EPA ID No. ID4890008952

Dear Ms Brooks:

The purpose of this letter is to transmit the above-referenced final Part B partial-permit. A public notice proposing the intent to issue a hazardous waste facility partial-permit appeared in The Idaho Statesman and The Post Register on December 1, 1999. The public comment period closed at 5:00 p.m. MST, January 14, 2000. The purpose of the public notice was to afford the public the opportunity to comment on the draft partial-permit.

During the public comment period, the DEQ did not receive any written comments or written requests for a public hearing. Therefore, in accordance with IDAPA 16.01.05.013 [40 CFR §124.15(a)], this letter is notification that the DEQ, acting under the authority of the Hazardous Waste Management Act of 1983, as amended, hereby approves the enclosed partial-permit for the WERF/WROC. Furthermore, in accordance with IDAPA 16.01.05.013 [40 CFR §124.15(b)(3)], the permit for the WERF/WROC shall be effective immediately.

If you have any questions, please contact Mr. Robert Bullock at (208) 373-0502.

Sincerely,

C Stephen Allred
Administrator

CSA\BAM:ls \ineel\letters\2000\werfwroc.apr

Enclosures

cc Jeff Hunt, EPA Region 10 (w/enclosures)
Kliss McNeal, Bechtel BWXT
INpv 11-12
COF
IFRO (w/enclosures)
Kathleen Trever, INEEL Oversight
INpwm

STATE OF IDAHO
DIVISION OF
ENVIRONMENTAL QUALITY

1410 North Hilton • Boise, Idaho 83706-1255 • (208) 373-0502

Dirk Kempthorne, Governor
C. Stephen Allred, Administrator

February 3, 2000

Mr. Richard C. Cullison
Department of Energy, Idaho Operations Office
850 Energy Drive
Idaho Falls, Idaho 83401-1563

RE: Part A Modification Request to Change the Waste Experimental Facility (WERF) Stabilization Process at the Waste Reduction Operations Complex located on the Idaho National Engineering and Environmental Laboratory (INEEL) EPA ID #ID4890008952

Dear Mr. Cullison:

The Division of Environmental Quality (DEQ) has completed a review of the Final Part A Permit Modification Request Change, Waste Experimental Facility (WERF) Stabilization Process at the Waste Reduction Operations Complex, located on the INEEL EPA ID #ID4890008952.

The DEQ has determined that the requested modification is consistent with the requirements of IDAPA 16.01.05.012 [40 CFR §270.72], and is approved.

If you have any questions concerning this matter, please contact Mr. Brian English at (208) 373-0425.

Sincerely,

Brian R. Monson
Hazardous Waste Program Manager
Waste Management & Remediation Prg. Office

BRM\BE:ls \wer\letters\pertasta.mod

cc: Catherine Massimino, EPA Region 10
Kathleen Trever, INEEL Oversight
IFRO
INpwi 3
COF

STATE OF IDAHO
DIVISION OF
ENVIRONMENTAL QUALITY

1410 North Hilton • Boise, Idaho 83706-1255 • (208) 373-0502

Dirk Kempthorne, Governor
C. Stephen Allred, Administrator

December 17, 1999

Mr. Richard C. Cullison
Department of Energy, Idaho Operations Office
850 Energy Drive
Idaho Falls, ID 83401-1563

RE: Part A Modification Request to Add Hazardous Waste Number U134 to the Waste Experimental Facility Incinerator Final Revision Number 22, November 22, 1999

Dear Mr. Cullison:

The Division of Environmental Quality (DEQ) has completed a review of the Final Part A Permit Modification Request to add EPA Hazardous Waste Number U134 to the Waste Experimental Reduction Facility (WERF) Incinerator on the Idaho National Engineering Laboratory (INEEL, EPA ID No. ID4890008952).

The DEQ has determined that the requested modification is consistent with the requirements of IDAPA 16.01.05.012 [40 CFR §270.72] and is approved, subject to the conditions listed in the Request Justification.

If you have any questions concerning this matter, please contact Mr. Brian English at (208) 373-0425.

Sincerely,

Kate Kelly, Administrator
Waste Management & Remediation Prg. Office

KK\REB\BE:ls wer\letters\part134.mod

cc: Catherine Massimino, EPA Region 10
Kathleen Trever, INEEL Oversight
IFRO
INpwi 2
COF

STATE OF IDAHO
DIVISION OF
ENVIRONMENTAL QUALITY

1410 North Hilton • Boise, Idaho 83706-1255 • (208) 373-0502

December 15, 1999

Ms. Nichole Brooks
DOE – Idaho Operations Office
850 Energy Drive
Idaho Falls, Idaho 83401-1563

RE: Draft Justification for the Resource Conservation and Recovery Act Part A Modification for the WROC Repackage Portable Storage Unit (RPSUs)

Dear Ms. Brooks:

The DEQ has reviewed the above-referenced draft justification for modifying the INEEL Part A Permit and has the following questions or comments:

1. Section III.B. indicates that one RPSU would be staged outside of the MWSF during a repackaging campaign, and that this storage configuration would allow movement of waste into the MWSF Staging Room. With the exception of this one reference, the justification indicates one-way movement of waste, i.e., from the MWSF to the WERF. Clarify whether repackaged waste would be moved from the WERF to the MWSF, or under which circumstances repackaged waste would be taken out of the RPSUs and moved into the MSWF.

2. Section V.B. indicates that inspections would be performed in accordance with the WERF/WROC Part B Partial Permit Application. Indicate any additional administrative controls or recordkeeping requirements that would be necessary to maintain the inspections required in 40 CFR §265.174. Also indicate the revision number of the Part B Partial Permit Application cited in the justification.

3. Section V.C. indicates that the same contingency plan procedures identified in the WERF/WROC Part B Partial Permit Application would be followed for the RPSUs. Indicate whether additional changes to the contingency plan, required in 40 CFR §265, Subpart D, would be required to address potential transportation accidents. Also indicate the revision number of the Part B Partial Permit Application cited in the justification

4. Section V.D. indicates that the same training requirements in the WERF/WROC Part B Partial Permit Application would be followed for personnel involved with the RPSUs. Indicate any additional training, required under 40 CFR §265.16, that may be necessary to assure administrative control of the waste types stored in the

RPSUs (i.e., repackaged burn boxes only); additional inspection tracking; RPSU movement procedures; or changes in procedures that would require updating the contingency plan training. Also indicate the revision number of the Part B Partial Permit Application cited in the justification.

5. Describe the method for loading/unloading and moving the RPSUs from one facility to another.

Please provide your response in a letter format with submittal of your revised Part A Permit Application. If you have any questions, please contact Ms. Charleen Roberts at (208) 373-0316.

Sincerely

Robert E. Bullock
Hazardous Waste Permit Coordinator
Waste Management & Remediation Program

REB\CR:ls [illegible]

cc: J. Hunt, EPA, Reg. 10
Idaho Falls Reg. Office
INpv11-12 and INppa11-12
K. Trever, INEEL Oversight
COF

STATE OF IDAHO
DIVISION OF
ENVIRONMENTAL QUALITY

1410 North Hilton, Boise, ID 83706-1255, (208) 373-0502

Dirk Kempthorne, Governor

July 6, 1999

CERTIFIED MAIL # P 241 839 634

Nicole Brooks
DOE - Idaho Operations Office
850 Energy Drive
Idaho Falls, ID 83401-1563

Dear Ms. Brooks:

Re: May 14, 1999, Submittal of Draft Justification for the Part A Modification Requesting Interim Status Changes at the Idaho Nuclear Technology and Engineering Complex (INTEC), Idaho National Engineering and Environmental Laboratory (INEEL), EPA ID No. ID4890008952 (Draft Justification)

The DEQ has reviewed your Draft Justification. Your submittal fails to provide the information necessary for DEQ to approve/concur with the requested modification. Therefore, DOE shall revise the Draft Justification to address the enclosed List of Concerns.

If you have any questions, please contact Vivien Hall at 208/373-0137.

Sincerely,

Robert E. Bullock
Hazardous Waste Permit Coordinator
State Waste Program Office

REB/VSH/ra INEEL99\INTECPTA.LTR

Enclosure

cc: Jeff Hunt, EPA Region 10
Kliss McNeel, LMITCO
Kathleen Trever, INEEL Oversight
Rensay Owen, Idaho Falls Regional Office
INppa4
COF

CONCERNS

PART A PERMIT MODIFICATION FOR INTERIM STATUS UNITS
IDAHO NUCLEAR TECHNOLOGY AND ENVIRONMENTAL COMPLEX
IDAHO NATIONAL ENGINEERING AND ENVIRONMENTAL LABORATORY
EPA ID No. ID4890008952

The following list of concerns was compiled by the Idaho Department of Health and Welfare (Department), Division of Environmental Quality. This list identifies deficiencies found in the Justification for a Part A Modification.

GENERAL COMMENTS

IDAPA 16.01.05.009 [40 CFR § 265.13(a)(1)] *Before an owner or operator treats, stores, or disposes of any hazardous wastes . . . , he must obtain a detailed chemical and physical analysis of a representative sample of the waste . . .*

The Draft Justification identifies that chemicals such as nitric acid, sodium hydroxide, aluminum nitrate, and oxalic acid may be used to treat the waste in VES-WL-133, VES-WL-111, VES-WL-101, and the CPP-604 Tank Farm Tanks. Describe the criteria of the waste solution for determining which chemicals may be added to maintain proper corrosion control, prevent precipitation of solids from the waste solution, and provide for critical control measures.

For tank systems being added, include a summary of how the waste will be sampled and a summary of the detailed chemical and physical analyses conducted for the waste streams that are to be stored and treated.

IDAPA 16.01.05.009 [40 CFR § 265.191(a)] *For each existing tank system that does not have secondary containment meeting the requirements of § 265.193, the owner or operator must determine that the tank system is not leaking or is unfit for use. Except as provided in paragraph (c) of this section, the owner or operator must obtain and keep on file at the facility a written assessment, reviewed and certified by an independent, qualified, registered professional engineer in accordance with § 270.11(d), that attests to the tank system's integrity by January 12, 1988.*

Clarify whether or not the existing tank systems (tanks and associated ancillary equipment) included in the Draft Justification have secondary containment systems meeting the requirements of IDAPA 16.01.05.009 [40 CFR § 265.193]. For any tanks and associated ancillary equipment hot having secondary containment, indicate whether the required integrity assessment has been conducted.

IDAPA 16.01.05.009 [40 CFR § 265.191(c)] *Tank systems that store or treat materials that become hazardous wastes subsequent to July 14, 1986, must conduct this assessment within 12 months after the date that the waste becomes a hazardous waste.*

Clarify the applicability of this citation for tanks and ancillary equipment being added or modified via the requested interim status permit modification.

IDAPA 16.01.05.009 [40 CFR § 265.193(f)] *Ancillary equipment must be provided with full secondary containment (e.g., trench, jacketing, double-walled piping) that meets the requirements of paragraph (b) and (c) of this section . . .*

For tank systems being added to the RCRA Part A Permit Application, provide information addressing this requirement including materials of construction and secondary containment systems.

IDAPA 16.01.05.012 [40 CFR § 270.13(i)] *A description of the processes to be used for treating, storing, and disposing of hazardous waste, and the design capacity of these items.*

For tank systems being added to the RCRA Part A Permit Application, provide a physical description of each tank system, i.e., tank materials of construction and dimensions of each tank and its secondary containment system.

SPECIFIC COMMENTS

VES-WL-132, CPP-604 PEW Feed/Storage and Treatment Tank

In Section 2.a.1 of page 4, clarify that "the present 7,000 gallons/day capacity limit" is correct for an annual average daily basis. In addition, demonstrate (i.e., through engineering calculations) that the requested treatment capacity increase to 28,000 gallons/day in the 4,700-gallon sedimentation tank will not compromise the vessel's ability to remove solids.

IDAPA 16.01.05.012 [40 CFR § 270.13(i)] *A description of the processes to be used for treating, storing, and disposing of hazardous waste, and the design capacity of these items.*

Describe the solid removal system and the types of solids removed from the tank.

VES-WL-111, CPP-604 PEW Feed/Storage Tank

IDAPA 16.01.05.009 [40 CFR § 265.192(a)] *The owner or operator must obtain a written assessment reviewed and certified by an independent, qualified, registered professional engineer in accordance with § 270.11(d) attesting that the system has sufficient structural integrity and is acceptable for the storing and treating of hazardous waste.*

It appears that VES-WL-111 is subject to the requirements of this paragraph. Clarify whether the required assessment has been conducted and if it is available upon request.

IDAPA 16.01.05.009 [40 CFR § 265.200] *In addition to performing the waste analysis required by § 265.13, the owner or operator must, whenever a tank system is to be used to treat chemically or to store a hazardous waste that is substantially different from waste previously treated or stored in that tank system; or treat chemically a hazardous waste with a substantially different process than any previously used in that tank system . . .*

It is not clear whether or not the tank has been used for other purposes since 1995/1996. Clarify this matter and determine whether IDAPA 163.01.05.009 [40 CFR § 265.200] is applicable.

VES-WL-101, PEW Bottoms Collection Tank

IDAPA 16.01.05.012 [40 CFR § 270.72(3)] ***Changes in the processes for the treatment, storage, or disposal of hazardous waste or addition of processes if the owner or operator submits a revised part A permit application prior to such change (along with a justification explaining the need for the change) and the Director approves the change because . . .***

Concerning the addition of tank treatment capacity, provide an explanation of why the addition of chemicals is now necessary for proper process operations.

Part A Application

1. Page 4 of 7, Item XII, line 8. Include the appropriate symbol (* for hazardous waste, ** for radioactive mixed waste, or *** for hazardous and radioactive mixed waste).

2. Page 4d of 7, Item XII, first bullet. The fourth line shall be revised as follows: 1 tank (WL-132) at 4,700 gallons.

3. To "separate out" VES-WM-100, VES-WM-101, and VES-WM-102 from the ICPP Tank Farm Tanks, revise the process description on page 6 (IZ-1) of 7, line 1, to read CPP-604 Tank Farm Tanks.

STATE OF IDAHO
DIVISION OF
ENVIRONMENTAL QUALITY

1410 North Hilton, Boise, ID 83706-1255, (208) 373-0502

Dirk Kempthorne, Governor

May 19, 1999

Nicole Brooks
DOE - Idaho Operations Office
850 Energy Drive
Idaho Falls, ID 83401-1563

Re: Interim Status Request for VES-SFE-106 at the Idaho Nuclear Technology Engineering Center (INTEC), Idaho National Engineering and Environmental Laboratory (INEEL), EPA ID No. ID48900089952.

Dear Ms. Brooks:

The DEQ, Air and Hazardous Waste Division, Hazardous Waste Permitting Bureau (HWPB) has reviewed your March 5, 1999, letter providing clarification of the INEEL Part A permit application, and requesting that interim status be expanded to include tank treatment (T01) for VES-SFE-106. Based on this review, your interim status request for T01 at VES-SFE-106 is hereby approved. The information provided in the previously submitted Part A modification dated August 14, 1997, will be added to Volume 1 of the INEEL Part A.

If you have any questions, please contact Vivien Hall at 208/373-0137.

Sincerely,

C. Stephen Allred
Administrator

CSA/VSH/ra INEEL99\SFE106.LTR

cc: Jeff Hunt, EPA Region 10
Kliss McNeel, LMITCO
Kathleen Trever, INEEL Oversight
Idaho Falls Regional Office
Mike Gregory, CAB
INppa
COF

STATE OF IDAHO
DIVISION OF
ENVIRONMENTAL QUALITY

1410 North Hilton, Boise, ID 83706-1255, (208) 373-0502 Dirk Kempthorne, Governor

May 18, 1999

Nicole Brooks
DOE - Idaho Operations Office
850 Energy Drive
Idaho Falls, ID 83401-1563

Dear Ms. Brooks:

Re: D-Cell Operations at the Idaho Nuclear Technology Engineering Center (INTEC), Idaho National Engineering and Environmental Laboratory (INEEL), EPA ID No. ID48900089952

The DEQ, Air and Hazardous Waste Division, Hazardous Waste Permitting Bureau (HWPB) has reviewed your April 7, 1999, letter providing information on the future of D-Cell operations. This letter serves notice that the HWPB acknowledges the D-Cell as an interim status container storage, under the provisions of IDAPA 16.01.05.009 [40 CFR Part 265, Subpart I]. Future closure of this unit must be performed in accordance with IDAPA 16.01.05.009 [40 CFR Part 265, Subpart G].

If you have any questions, please contact Vivien Hall at 208/373-0137.

Sincerely,

Robert E. Bullock, Manager
Hazardous Waste Permitting Bureau
Air and Hazardous Waste Division

REB/VSH/ra INEEL99DCELLOP.LTR

cc: Jeff Hunt, EPA Region 10
Dave Wessman, DOE-ID
Kliss McNeel, LMITCO
Idaho Falls Regional Office
INppa
COF

STATE OF IDAHO
DIVISION OF
ENVIRONMENTAL QUALITY

1410 North Hilton, Boise, ID 83706-1255, (208) 373-0502 Dirk Kempthorne, Governor

February 25, 1999

CERTIFIED MAIL # P 241 839 513

Nicole Brooks
DOE - Idaho Operations Office
850 Energy Drive
Idaho Falls, ID 83401-1563

Dear Ms. Brooks:

This letter is in response to your request to change the RCRA Part A for the Idaho Nuclear Technology and Engineering Center (INTEC) located on the INEEL, EPA ID No. ID4890008952.

The DEQ, Air & Hazardous Waste Division, Hazardous Waste Permitting Bureau (HWPB) has reviewed the request for a storage capacity increase from 134,640 gallons to 2,244,156 gallons at the Radioactive Mixed Waste Staging Facility (RMWSF).

The HWPB concurs with the justification that, in accordance with IDAPA 16.01.05.012 [40 CFR §270.72(a)(2)(I)(ii)], this change is necessary to allow for compliant storage of recently reclassified mixed waste. Therefore, the HWPB hereby approves the capacity increase. The Part A has been revised to reflect this.

If you have any questions concerning this matter, please contact Beth McPherson of my staff at 208/373-0198

Sincerely,

R Wilson for:

Orville D. Green
Assistant Administrator
Air & Hazardous Waste

ODG/BAM/ra INEEL9961617RTALTR

cc: Roberta Hedeen, EPA Region X
Kathleen Trever, INEEL Oversight Program
Idaho Falls Regional Office
Dave Pisarski, CAB

INppbdm
INppa
COF

Printed on Recycled Paper

STATE OF IDAHO
DIVISION OF
ENVIRONMENTAL QUALITY

1410 North Hilton, Boise, ID 83706-1255, (208) 373-0502

Dirk Kempthorne, Governor

January 26, 1999

CERTIFIED MAIL # P 070 696 453

Donald N. Rasch
DOE - Idaho Operations Office
850 Energy Drive
Idaho Falls, Idaho 83401-1563

Dear Mr. Rasch:

This letter is concerning your January 14, 1999, submittal regarding modification of the Interim Status Document (Part A, Volume 2) relative to operational changes in container storage unit capacity at the Waste Reduction Operations Complex (WROC) for the Idaho National Engineering and Environmental Laboratory (INEEL), EPA ID No. ID4890008952.

The DEQ, Air & Hazardous Waste Division, Hazardous Waste Permitting Bureau (HWPB) has reviewed your requested changes to the Interim Status Document. The requested changes appear to meet the qualifications at IDAPA 16.01.05.012 [40 CFR §270.72(a)(3)(ii)]. Therefore, in accordance with the provisions of this citation, your request is hereby approved.

If you should have any questions regarding these matters, please contact Charleen Roberts at 208/373-0316.

Sincerely,

Orville D. Green

Orville D. Green
Assistant Administrator

ODG/CAR/rla INEEL99\V11&12\WROCPRTALTR

cc: Roberta Hedeen, EPA Region 10
Kliss McNeel, LMITCO
Kathleen Trever, INEEL Oversight
Jim Johnston/Rensay Owen, IFRO
Robert Bullock, HWPB
INppa3
COF

IDAHO DEPARTMENT
OF HEALTH AND WELFARE
DIVISION OF
ENVIRONMENTAL QUALITY

1410 North Hilton, Boise, ID 83706-1255, (208) 373-0502

Philip E. Batt, Governor

April 13, 1998

Donald N. Rasch
U. S. Department of Energy
Idaho Operations Office
850 Energy Drive
Idaho Falls, Idaho 83401-1563

Dear Mr. Rasch:

On April 6, 1998 the Department of Energy (DOE) submitted a HWMA/RCRA Part A modification to the Idaho Division of Environmental Quality (IDEQ) to remove the D002 corrosive characteristic hazardous waste code from the ICPP Westside Holdup Tank (WHT) No. 105. According to previous submittals, dated 12/19/97, D002 corrosive characteristic hazardous waste had previously been removed from WHTs No. 103 and 104 as required by the October 7, 1992 Consent Order (the Consent Order), between the Idaho Department of Health and Welfare (the Department) and the DOE.

These actions meet the intent of Section 5.22 of the Consent Order. With its actions DOE has fulfilled all terms of the Consent Order. Pursuant to Section 10.3 of the Consent Order IDEQ hereby terminates the Consent Order.

In Section 5.2 of the Consent Order, the Department agreed that DOE operate specific satellite accumulation areas (SAA) at locations not at or near the point of hazardous waste generation. This agreement providing extra distance was justified for radiological and other safety concerns. The agreement was provided with the understanding that DOE not accumulate in excess of 55 gallons of hazardous waste or one quart of acutely hazardous waste listed in 40 CFR § 261.33 (e) at any SAA, and that the SAA be specifically identified in the Consent Order or added at a later date only after express approval of the IDEQ Compliance Assurance Bureau Chief (formerly Enforcement Bureau Chief).

Although at this time both IDEQ and DOE agree to terminate the Consent Order, the variance set forth in Section 5.2 of the Consent Order shall remain in effect. Accordingly, the following list of SAAs located at the Idaho National Engineering and Environmental Laboratory (INEEL) may continue to be operated at the specific maximum distances from the point of hazardous waste generation, or at as close a distance as allowed to ensure safe operations where a maximum distance is not identified.

1) SAAs identified and agreed to in the Consent Order

Facility Identification	Type of Hazardous Waste	Maximum Distance (from point of hazardous waste generation)
ANL-752		
- Analytical Lab (Vault 62)	Uranium/Cadmium Samples	210 ft.
- Analytical Lab (Vault 62)	Radioactive Lead Samples	210 ft.
ANL-785		
	Photochemicals	25 ft.

	Photo processor Cleaning Chemicals	25 ft.
CFA-623		
- Spray Paint Booth CFA-623-000-a	Paint related waste	100 ft.

2) SAAs added to the list in an August 18, 1993 request.

Facility Identification

ARA-I
-ARA-626, ARA-627, ARA-628, ARA-629, ARA-631, and ARA-729

ARA-II
-ARA-601, ARA-602, ARA-604, ARA-605, ARA-606, ARA-608, ARA-612, ARA-613, ARA-614, ARA-615, ARA-719, ARA-735, and ARA-736

BORAX IV
-ANL-717

CFA
-CFA-669

ETR
-TRA 642, TRA-643, TRA-644, TRA-645, TRA-704, TRA-705, TRA-706, and TRA-753

LOFT
-MTA and ancillaries

MTR
-TRA-603, TRA-604, TRA-607, TRA-610, TRA-611, TRA-612, TRA-613, TRA-626, TRA-630, TRA-635, TRA-636, TRA-641, TRA-651, TRA-665, TRA-710, TRA-712, and TTAF (MTR Canal)

TAN and TAN/TSF
-TAN-607, TSF-1, TSF-2, TSF-7, TSF-9, TSF-10, TSF-11, TSF-12, TAN-606, and TAN-616

3) SAAs added to the list by the 8/27/97 and 10/8/97 requests

Facility Identification	Type of Waste	Maximum Distance (from point of hazardous waste generation)
CFA		
-CFA-623-PAINT-A	Rinse wastewater	200 ft.
PBF		
-PB -ARA1-CON1-A	D&D waste from ARA-1	100 ft.

ANL-W		
-Analytical Lab	EFL, Pb Gloves; TRU, CH	210 ft.
-Analytical Lab	Pb Lined Gloves, F/B 127	210 ft.
-Analytical Lab	Pb Debris from Casting Lab	210 ft.
-Fuel Conditioning Facility Subcell	MW Light Bases	210 ft.
-Fuel Conditioning Facility Subcell	MW Crushed Light Tubes	210 ft.
-Fuel Conditioning Facility Subcell	Cadmium Plated Waste	210 ft.
-Machine Shop	Pb Containing PPE/Debris	120 ft.
NRF		
-ECF High Bay	Pb Painted Debris	80 ft.
-ECF Hot Cell 12	Pb contaminated waste	100 ft.

SAAs identified as "Centralized" or "Maintenance" are not included in this variance, due to the Universal Waste Rules, IDAPA 16.01.05.016 [40 CFR Subpart 273], that allow for certain wastes to be managed in centralized SAAs.

DOE may continue to request new SAAs be added to the above list for radiological safety reasons. Nothing in this letter shall relieve DOE from its obligation to comply with any other requirements regarding the operation and maintenance of SAAs, or any other applicable law or binding documents.

If you have questions, please contact D. Michael Gregory, of my staff, at (208) 373-0502.

Sincerely,

David J. Pisarski, Chief
Compliance Assurance Bureau
IDEQ-Air and Hazardous Waste

DJP/DMG/sd c:\...\termlet.ltr

cc: C. Reno, IDEQ-Idaho Falls
K. Kelly, Deputy Attorney General
INce23
COF 1.1

IDAHO DEPARTMENT OF HEALTH AND WELFARE
DIVISION OF
ENVIRONMENTAL QUALITY

1410 North Hilton, Boise, ID 83706-1255, (208) 334-0502

Philip E. Batt, Governor

October 2, 1997

CERTIFIED MAIL # P 326 991 396

Donald N. Rasch
DOE - Idaho Operations Office
850 Energy Drive
Idaho Falls, ID 83401-1563

Dear Mr. Rasch:

This letter is in response to the Department of Energy - Idaho Operations Office September 23, 1997, request for interim status for mixed waste repackaging at the Waste Experimental Reduction Facility and Mixed Waste Storage Facility on the Idaho National Engineering and Environmental Laboratory, EPA ID No. ID4890008952.

Based on review of the page changes and supplemental information provided, the DEQ has determined the requested changes to the Interim Status Document are acceptable and hereby approved in accordance with IDAPA 16.01.05.012 [40 CFR §270.72(a)(3)(ii)].

If you have any questions or comments, please contact Bob Bullock at (208) 373-0502.

Sincerely,

Wallace N. Cory, P.E.
Administrator

WNC/ria INEELSTRTRKGAPRVLTR

cc: Linda Meyer, EPA Region 10
Jay Mitchell, LMITCO
Kathleen Trever, INEEL Oversight
Idaho Falls Regional Office
Brian English, HWPB
INppa
INpwi
COF

IDAHO DEPARTMENT
OF HEALTH AND WELFARE
DIVISION OF
ENVIRONMENTAL QUALITY

1410 North Hilton, Boise, ID 83706-1255, (208) 334-0502

Philip E. Batt, Governor

August 22, 1997

CERTIFIED MAIL # 326 991 385
RETURN RECEIPT REQUESTED

Donald N. Rasch
DOE - Idaho Operations Office
850 Energy Drive
Idaho Falls, ID 83401-1563

Dear Mr. Rasch:

This letter is in response to the Department of Energy's August 14, 1997, request for interim status for the VES-SFE-106 hazardous waste storage tank at the Idaho Chemical Processing Plant on the Idaho National Engineering and Environmental Laboratory (INEEL), EPA ID No. ID4890008952.

Your interim status request for storage at VES-SFE-106 is hereby approved and the information provided will be added to the copies of Volume 1 of the INEEL Part A maintained by the DEQ.

If you have any questions or comments, please contact Bob Bullock at (208) 373-0502.

Sincerely,

William N. Cory

Wallace N. Cory, P.E.
Administrator

WNC/rla INEEL97\106APRV.LTR

cc: Linda Meyer, EPA Region 10
Jay Mitchell, LMITCO
Kathleen Trever, INEEL Oversight
Idaho Falls Regional Office
Mike Gregory, CAB
INppa3
COF

IDAHO DEPARTMENT
OF HEALTH AND WELFARE

DIVISION OF
ENVIRONMENTAL QUALITY

1410 North Hilton, Boise, ID 83706-1255, (208) 334-0502

Philip E. Batt, Governor

May 20, 1997

CERTIFIED MAIL # 326 991 357
RETURN RECEIPT REQUESTED

Donald N. Rasch
DOE - Idaho Operations Office
850 Energy Drive
Idaho Falls, ID 83401-1563

Dear Mr. Rasch:

This letter is in response to the information provided in your request for RCRA Interim Status dated April 22, 1997. The submittal provides information regarding VES-SFE-106 at the Idaho Chemical Processing Plant (ICPP) on the Idaho National Engineering and Environmental Laboratory, EPA ID No. 4890008952.

Based upon the information provided, it appears that VES-SFE-106 meets the interim status requirements of IDAPA 16.01.05.009 [40 CFR 265, Subpart J]. Therefore, in accordance with IDAPA 16.01.05.012 [40 CFR 272], DOE shall submit three (3) copies of the requisite revised Part A pages and Owner/Operator Certification. Approval of interim status shall be contingent upon DEQ, Air and Hazardous Waste Division review and approval of the revised Part A documents.

If you have any questions or comments, please contact Bob Bullock at (208) 373-0502.

Sincerely,

Randal W. Steger

Randal Steger, Manager
Hazardous Waste Pennits Bureau
Air and Hazardous Waste Division

RWS/REB/ra INEEL97\VES106.LTR

cc: Linda Meyer, EPA Region 10
Kathleen Trever, INEEL Oversight
Idaho Falls Regional Office
Mike Gregory, CAB
INppa3
COF

IDAHO DEPARTMENT
OF HEALTH AND WELFARE

DIVISION OF
ENVIRONMENTAL QUALITY

1410 North Hilton, Boise, ID 83706-1255, (208) 334-0502

Philip E. Batt, Governor

December 3, 1996

Donald N. Rasch
DOE - Idaho Operations Office
850 Energy Drive
Idaho Falls, ID 83401-1563

Dear Mr. Rasch:

This letter is being sent to address additional information submitted by LMITCO October 11, 1996, regarding an interim status request for the CPP-603 storage tank (VES-SFE-106) at the Idaho National Engineering Laboratory (INEL), EPA ID No. ID4890008952.

Information provided for the VES-SFE-106 does not describe a unit that currently meets interim status requirements, i.e., ongoing "Upgrade Project" to meet interim status requirements. Therefore, in accordance with IDAPA 16.01.05.012 [40 CFR 270.70(2)(b)], the DEQ, Air & Hazardous Waste Division, Hazardous Waste Permitting Bureau (HWPB) is not able to grant interim status for the VES-SFE-106 at this time. When the VES-SFE-106 does meet secondary containment, inspection, and leak detection requirements, the HWPB will reconsider a renewed request for interim status for this unit.

If you have any questions, please contact Bob Bullock at (208) 373-0502.

Sincerely,

Randal W. Steger, Manager
Hazardous Waste Permitting Bureau
Air & Hazardous Waste Division

RWS/REB/ra INEL96VES106LTR

cc: Dawnee McCulley, EPA Region 10
Idaho Falls Regional Office
INppa
COF

IDAHO DEPARTMENT
OF HEALTH AND WELFARE

DIVISION OF
ENVIRONMENTAL QUALITY

1410 North Hilton, Boise, ID 83706-1255, (208) 334-0502

Philip E. Batt, Governor

September 19, 1996

CERTIFIED MAIL # 070 696 600
RETURN RECEIPT REQUESTED

Donald N. Rasch
DOE - Idaho Operations Office
850 Energy Drive
Idaho Falls, ID 83401-1563

Dear Mr. Rasch:

This letter is concerning your August 9, 1996, submittal requesting modification of the Interim Status Document (Part A) for the Idaho National Engineering Laboratory (INEL), EPA ID No. ID4890008952.

Aside from approving the request to increase the process capacity of the NWCF Evaporator Tank System, the DEQ, Air & Hazardous Waste Division, Hazardous Waste Permitting Bureau (HWPB) has identified the following concerns associated with your submittal:

According to discussions between Jack Depperschmidt, of DOE-ID, and Randal W. Steger and Bob Bullock, of DEQ, the HWPB is requesting that DOE-ID provide additional information concerning the CPP-603 Storage Tank, i.e., secondary containment, overspill controls (from the pictures, this appears to be a problem) and the ability to inspect this unit.

Also discussed was the fact that your request to add the D003 code for the SMC Hazardous Waste Storage Area is no longer viable. Furthermore, the language describing wastes to be stored at this facility, i.e., ". . . this facility will accept waste from non-SMC sources . . ." must be clarified to reflect whether this unit will or will not be receiving off-site/non-INEL waste. Certainly, the name change can be approved.

If you should have any questions regarding these issues, please contact Bob Bullock at (208) 373-0502.

Sincerely,

Randal W. Steger

Randal W. Steger, Manager
Hazardous Waste Permitting Bureau
Air & Hazardous Waste Division

RWS/REB/ra INEL\1996\PARTAMOD.LTR

cc: Dawnee McCulley, EPA Region 10
Jim Johnston, EIRO
Bob Ferguson, INEL Oversight
INppa
INipc
COF

IDAHO DEPARTMENT
OF HEALTH AND WELFARE

DIVISION OF
ENVIRONMENTAL QUALITY

1410 North Hilton, Boise, ID 83706-1255, (208) 334-0502

Phil E. Batt, Governor

September 12, 1996

CERTIFIED MAIL # 070 696 599
RETURN RECEIPT REQUESTED

Mr. Donald N. Rasch
DOE - Idaho Operations Office
850 Energy Drive
Idaho Falls, ID 83401-1563

Dear Mr. Rasch:

This letter is concerning your August 9, 1996, submittal regarding modification of the Interim Status Document (Part A) for the Idaho National Engineering Laboratory (INEL), EPA ID No. ID4890008952.

The DEQ, through the Air & Hazardous Waste Division, Hazardous Waste Permitting Bureau (HWPB) has determined the request to increase the process capacity of the NWCF Evaporator Tank System is acceptable and, as such, is hereby approved in accordance with IDAPA 16.01.05.012 (40 CFR §270.72). This approval does not release DOE-ID from compliance with all other applicable federal, state, or local regulations.

The HWPB has identified concerns associated with the other requested Part A modifications. However, in the interest of expediting this approval, the decision has been made to deal with those concerns separately.

If you should have any questions regarding these matters, please contact Bob Bullock at (208) 373-0502.

Sincerely,

for Wallace N. Cory, P.E.
Administrator

WNC/REB/ra [illegible]
By fax - original to be mailed
cc: Dawnee McCulley, EPA Region 10
Jim Johnston, EIRO
Bob Ferguson, INEL Oversight
INppa
COF

IDAHO DEPARTMENT
OF HEALTH AND WELFARE

DIVISION OF
ENVIRONMENTAL QUALITY

1410 North Hilton, Boise, ID 83706-1255, (208) 334-0502

Philip E. Batt, Governor

May 8, 1996

CERTIFIED MAIL # P 875 704 481
RETURN RECEIPT REQUESTED

Donald N. Rasch
DOE Idaho Operations Office
850 Energy Drive
Idaho Falls, ID 83401-1563

Dear Mr. Rasch:

This letter is regarding revised portions of the HWMA/RCRA Part A, Interim Status Document dated April 2, 1996, for the Department of Energy's, Idaho National Engineering Laboratory, EPA ID No. ID4890008952.

The DEQ, Permits and Enforcement, Operating Permits Bureau has reviewed the revised pages to the Interim Status Document, which represent a proposed change, allowing four (4) tanks (VES-NCC-119, 122, 123, 129) at the Idaho Chemical Processing Facility New Waste Calcine Facility, that presently have interim status for storage, to conduct treatment in tanks under IDAPA 16.01.05.009 [40 CFR 265 Subpart J]. The proposed changes also include a modification of the tank treatment designation for the Process Equipment Waste Feed Tank (WL-133) and specify the addition of aluminum nitrate as an additional form of tank treatment for the WG/WH tanks (WG-100, WG-101, WH-100, WH-101).

The above-described proposed modifications, which allow addition of aluminum nitrate and/or nitric acid as a form of hazardous waste treatment, are hereby approved.

If you have any questions, please contact Robert Bullock of my staff at (208) 373-0502.

Sincerely,

Randal W. Hayes for

Brian R. Monson, Chief
Operating Permits Bureau
Permits and Enforcement

BRM/REB/rj INEL\1996\MCD002.LTR

cc: Dawnee McCulley, EPA Region 10
Bob Ferguson, INEL Oversight
Jim Johnston, EIRO
Rensay Owen, EIRO
INppa2
COF

IDAHO DEPARTMENT
OF HEALTH AND WELFARE

DIVISION OF
ENVIRONMENTAL QUALITY

RECEIVED IN
MAR 12 1996
Environmental Support

1410 North Hilton, Boise, ID 83706-1255, (208) 334-0502

Philip E. Batt, Governor

March 7, 1996

Donald N. Rasch
DOE - Idaho Operations Office
850 Energy Drive
Idaho Falls, ID 83401-1563

Dear Mr. Rasch:

This letter is in regard to the Department of Energy's December 5, 1995, request to modify the Interim Status Document (Part A) with respect to the New Waste Calcine Facility at the Idaho National Engineering Laboratory, EPA ID No. ID4890008952.

The DEQ, Permits and Enforcement, Operating Permits Bureau has reviewed your revised application dated February 1, 1996. Based upon the information provided, your request for increased estimated annual waste quantities and process design capacities for the calciner and associated storage and treatment tanks is hereby approved.

If you have any questions, please contact Bob Bullock at (208) 373-0502.

Sincerely,

Brian R. Monson, Chief
Operating Permits Bureau
Permits and Enforcement

BMR/REB/rj INEL\1996\NWCFNOD2.LTR

cc: Dawnee McCulley, EPA Region 10
Bob Ferguson, INEL Oversight
Jim Johnston, EIRO
Rensay Owen, EIRO
INppa2
COF

Printed on Recycled Paper

IDAHO DEPARTMENT
OF HEALTH AND WELFARE

DIVISION OF
ENVIRONMENTAL QUALITY

1410 North Hilton, Boise, ID 83706-1255, (208) 334-0502

Philip E. Batt, Governor

January 16, 1996

CERTIFIED MAIL # P 875 704 216
RETURN RECEIPT REQUESTED

Donald N. Rasch
DOE - Idaho Operations Office
850 Energy Drive
Idaho Falls, ID 83401-1563

Dear Mr. Rasch:

This letter is in response to recent discussions regarding the Department of Energy (DOE) request to add the SMC units to the RCRA Part A Permit for the Idaho National Engineering Laboratory, EPA ID No. ID4890008952.

Based on the DEQ, Permits and Enforcement, Operating Permits Bureau (OPB) review of information submitted December 5, 1995, and the fact that the waste processing is nearly complete, interim status is hereby granted for the calciner systems.

The OPB anticipates full compliance with the time constraints for closure of these units as outlined in IDAPA 16.01.05.009 [40 CFR 265.113]. Therefore, within forty-five (45) days of receipt of this letter, DOE shall submit a closure plan for the SMC units fulfilling the information requirements of IDAPA 16.01.05.009 [40 CFR 265, Subparts G, I, J, & P].

To this end, DOE shall submit four (4) complete copies of the Closure Plan.

Please submit three (3) copies to:

Brian Monson, Chief
Operating Permits Bureau
DEQ Permits and Enforcement
1410 North Hilton, 3rd Floor
Boise, ID 83706-1255

Plus one (1) additional copy to:

Dawnee McCulley HW-106
RCRA Permits Section
U.S. EPA Region 10
1200 Sixth Avenue
Seattle, WA 98101

If you have any questions, please contact Robert Bullock of my staff at (208) 373-0502.

Sincerely,

Brian R. Monson, Chief
Operating Permits Bureau
Permits and Enforcement

BRM/REB/rj INEL\1996\SMCINTAP.LTR

cc: Dawnee McCulley, EPA Region 10
Bob Ferguson, INEL Oversight
Matt Nelson, EIRO
Rensay Owen, EIRO
INppa
COF

IDAHO DEPARTMENT
OF HEALTH AND WELFARE

DIVISION OF
ENVIRONMENTAL QUALITY

1410 North Hilton, Boise, ID 83706-1255, (208) 334-0502

Philip E. Batt, Governor

December 21, 1995

Donald N. Rasch
DOE Idaho Operations Office
850 Energy Drive
Idaho Falls, ID 83401-1563

Dear Mr. Rasch:

This letter is in regard to the revised portions of the RCRA Part A Application received December 5, 1995, for the Department of Energy's (DOE) Idaho National Engineering Laboratory, EPA ID No. ID4890008952.

The DEQ, Permits and Enforcement, Operating Permits Bureau has completed a review of the Part A Permit revisions and has found several deficiencies. The deficiencies are included in two separate attachments to this letter. Attachment One addresses deficiencies in the revisions to the New Waste Calcine Facility (NWCF) located at the Idaho Chemical Processing Facility. Attachment Two specifies deficiencies in the Part A addition of the Specific Manufacturing Capabilities (SMC) Calciner located at Test Area North (TAN).

Based upon these notices of deficiency, the Department of Energy shall submit additional information and modifications for agency review and approval.

If you have any questions, please contact Robert Bullock of my staff at (208) 373-0502.

Sincerely,

Randall W. Stiger for

Brian R. Monson, Chief
Operating Permits Bureau
Permits and Enforcement

BRM/REB/rj INEL\1995\NCFRNCND.LTR

Attachments

cc: Dawnee McCulley, EPA Region 10
Bob Ferguson, INEL Oversight
Jim Johnstson, EIRO
Rensay Owen, EIRO
INppa2
COF

ATTACHMENT ONE
LIST OF DEFICIENCIES

RCRA INTERIM STATUS PART A PERMIT APPLICATION
NEW WASTE CALCINE FACILITY (NWCF)
IDAHO CHEMICAL PROCESSING FACILITY (ICPP)
IDAHO NATIONAL ENGINEERING LABORATORY
EPA ID No. ID4890008952

1. IDAPA 16.01.05.012 [40 CFR 270.13 (i) & (j)] "Part A of the RCRA application shall include the following information: . . . (i) A description of the process to be used for treating, storing and disposing of hazardous waste, and the design capacity of these items. and (j) A specification of the hazardous wastes listed or designated under 40 CFR part 261 to be treated, stored . . . and a general description of the processes to be used for such wastes."

Therefore, DOE shall provide a comprehensive narrative description of each process component (tanks, other) addressing treatment, storage, and identification of design capacity. Also, provide a general process flow description and diagram inclusive of each waste stream and treatment process.

2. IDAPA 16.01.05.012 [40 CFR 270.72 (a)(2)] "The owner or operator of an interim status facility may make the following changes at the facility: . . .Increases in the design capacity of processes used at the facility if the owner or operator submits a revised part A permit application prior to such a change (along with a justification explaining the need for the change) and the Director approves the changes because: . . ."

Provide a narrative description/justification explaining the need for increased waste storage and treatment, increased design capacities, and increased estimated annual waste quantities.

3. IDAPA 16.01.05.009 [40 CFR 265.13 (a)(1)] "Before an owner or operator treats, stores, or disposes of any hazardous wastes . . . he must obtain a detailed chemical and physical analysis of a representative sample of the waste."

Provide narrative information addressing this requirement and provide a summary of any/all detailed chemical and physical analyses of the waste stream(s) being treated and/or stored in the various HWMA/RCRA system components.

4. IDAPA 16.01.05.009 [40 CFR 265.200]

Because descriptions and waste analysis pertinent to current NWCF operations are lacking, it is not clear whether the waste listed in the modification request is the same as that currently being treated. In conjunction with fulfilling the waste analysis requirements, clarify this point and determine whether or not 40 CFR §265.200 is applicable.

5. General Issues:

Item I,B. of the Part A should indicate the INEL Site Wide Part A Permit revision number.

Item VI,A. was left blank. Mark the appropriate box.

ATTACHMENT TWO
LIST OF DEFICIENCIES

RCRA INTERIM STATUS PART A PERMIT APPLICATION
SPECIFIC MANUFACTURING CAPABILITIES (SMC) CALCINER
IDAHO NATIONAL ENGINEERING LABORATORY
EPA ID No. ID4890008952

1. IDAPA 16.01.05.012 [40 CFR 270.13 (i) & (j)] "Part A of the RCRA application shall include the following information: . . . (i) A description of the process to be used for treating, storing and disposing of hazardous waste, and the design capacity of these items. and (j) A specification of the hazardous wastes listed or designated under 40 CFR Part 261 to be treated, stored . . . and a general description of the processes to be used for such wastes."

   Therefore, DOE shall provide a comprehensive narrative description of each process addressing treatment, storage, and identification of design capacity. Also, provide a general process flow description and diagram inclusive of each waste stream and treatment process.

2. IDAPA 16.01.05.012 [40 CFR 270.72 (a)(2)] "The owner or operator of an interim status facility may make the following changes at the facility: . . . Increases in the design capacity of processes used at the facility if the owner or operator submits a revised part A permit application prior to such a change (along with a justification explaining the need for the change) and the Director approves the changes because: . . ."

   Provide a narrative description/justification explaining the need for the units (tank/drum storage and calciner).

3. IDAPA 16.01.05.009 [40 CFR 265.13 (a)(1)] "Before an owner or operator treats, stores, or disposes of any hazardous wastes . . . he must obtain a detailed chemical and physical analysis of a representative sample of the waste."

   Provide narrative information addressing this requirement and provide a summary of any/all detailed chemical and physical analyses of the waste streams being treated (both for calcination and stabilization).

4. IDAPA 16.01.05.009 [40 CFR 265 Subpart I]

   Concerning the addition of container storage, provide information in an amended Part A revision addressing inspections, management of containers and any other applicable requirements of this subpart.

5. IDAPA 16.01.05.009 [40 CFR 265 Subpart J]

   There is no clear determination within the materials provided indicating whether the additional tank storage is new or existing. Make this determination, then provide information compliant with the requirements of this Subpart.

6. **General Issues**

There are no Subpart X provisions in 40 CFR §265. Miscellaneous Units are only provided for under 40 CFR §264. Therefore, the appropriate designation appears to be other treatment (T04).

As per previous discussions with DOE personnel, the DOE agreed to provide assurances in an amended Part A application allowing operation these units and the associated container storage exclusively for the processing of the specific waste contianed in tanks HB-151 and HB-153. Subsequent to this exclusive use, all of the SMC, HWMA-regulated, calcining system components will be closed.

During review of other SMC documents, the OPB found reference to a recycled acid tank (Tank 158). Could this tank now be considered a hazardous waste storage tank and/or part of this treatment process?

IDAHO DEPARTMENT
OF HEALTH AND WELFARE

DIVISION OF
ENVIRONMENTAL QUALITY

1410 North Hilton, Boise, ID 83706-1255, (208) 334-0502

May 23, 1995

CERTIFIED MAIL # P 875 704 136
RETURN RECEIPT REQUESTED

Don N. Rasch
DOE - Idaho Operations Office
850 Energy Drive
Idaho Falls, ID 83401-1563

Dear Mr. Rasch:

This letter is in regard to the Modified RCRA Part A Permit dated March 27, 1995, for the Idaho National Engineering Laboratory, EPA ID No. ID4890008952.

The DEQ, Permits and Enforcement, Operating Permits Bureau (OPB), has completed a review of the Modified Part A Permit and has found additional items requiring revision.

1. The Part A Permit Application requires that specific units of measure be used when quantifying volumes for specific Process Codes. Sections XII (lines 4, 8 and 13) and XIII (lines 2, 4 and 8) do not meet this requirement. Revise these sections and their respective supplements to include correct volume measurements and Process Codes.

2. Item XIV, (ICPP) page 6(IC-1) of 7 for CPP-601/627 Container Storage is given a Process Code of S02. This should be S01 as designated in the Design Capacities Supplement.

3. Items XIV, (NODA) page 6(MC-1) of 7 for NODA Treatment and Item XIV, (PBF) page 6(PJ-1) of 7 for the Portable Water Treatment Unit indicate S01 Process Codes which are unaccounted for in the Item XII Design Capacities Supplement. Provide the necessary additions or deletions to fix these inconsistencies.

4. Within the Summary, Historical Information is referred to as being in Appendix I. Appendix I was not included in this submittal.

Printed on Recycled Paper

The Department of Energy shall submit the preceding modifications as replacement sections and pages for the Volume I and II revisions dated March 27, 1995. The OPB requests that these changes also be made and submitted as a complete WordPerfect 5.1 file version of Volumes I and II. The replacement section/pages and the WordPerfect file shall be submitted within thirty (30) calendar days of receipt of this letter.

If you have any questions, please contact Robert Bullock of my staff at (208) 334-5898.

Sincerely,

Randal W. Steger

Randal W. Steger, Manager
Operating Permits Bureau
Permits & Enforcement

RWS/REB/rj :c:\...\INEL\PARTA\BULLOCK\PARTAR~2.LTR

cc: Dawnee McCulley, EPA Region 10
Bob Ferguson, INEL Oversight
Acting Administrator, EIRO
Rensay Owen, EIRO
INppa2
COF

IDAHO DEPARTMENT
OF HEALTH AND WELFARE
DIVISION OF
ENVIRONMENTAL QUALITY

1410 North Hilton, Boise, ID 83706-1255, (208) 334-0502

Environmental Support for Governor

January 24, 1995

CERTIFIED MAIL # P 875 703 815
RETURN RECEIPT REQUESTED

Mr. Don N. Rasch
DOE - Idaho Field Office
785 DOE Place
Idaho Falls, ID 83402

Dear Mr. Rasch:

The Idaho Department of Health and Welfare (IDHW), through the DEQ, Permits and Enforcement, Operating Permits Bureau (OPB), has completed a review of the Part A permit modification requests for hazardous and/or mixed waste management units on the Idaho National Engineering Laboratory (INEL), EPA ID No. ID4890008952.

The OPB believes that the enclosed actions address all the pending Part A Application modification requests through January 1, 1995. Enclosure 1 identifies the Part A change requests that are approved by this letter. The Department of Energy (DOE) shall submit a revised Part A Application reflecting the current operational status of all hazardous waste management units (both Part A and Part B units) on the INEL within sixty (60) days of the receipt of this letter.

Please submit two (2) copies to:

Brian R. Monson, Chief
Operating Permits Bureau
DEQ Permits & Enforcement
1410 North Hilton, 3rd Floor
Boise, ID 83706

plus one (1) additional copy to:

Dawnee McCulley, HW-106
US EPA, Region 10
1200 Sixth Avenue
Seattle, WA 98101

The OPB requests that the revised Part A be submitted both as a WordPerfect 5.1 file and as a hard copy. A computerized copy of the Part A Application should simplify the processing of future modification requests.

Enclosure 2 identifies those Part A change requests which are denied, including the basis for denial, by this letter. Should the DOE (or the DOE contractor) wish to further pursue any of the denied Part A change requests, the DOE may provide additional information/documentation to justify the particular request.

If you have any questions concerning this matter, please contact Brian English of my staff at (208) 334-5898.

Sincerely,

Orville D. Green

Orville D. Green
Assistant Administrator
Permits & Enforcement

ODG/rj:C:\...\INEL\MISC\PARTAMOD.LTR

Enclosures

cc: Dawnee McCulley, EPA Region 10
Steve Hill, INEL Oversight
EIRO
INppa
COF

ENCLOSURE 1

The following requested modifications to the INEL Part A permit are hereby approved:

1. The change of DOE contractor operator to LITCO from WINCO, EG&G ID, and Babcock and Wilcox.

2. The addition of waste codes D004, D005, D010, D011, D022, D029, and F005 for waste storage in TSA-1, TSA-2, TSA-R, and Waste Storage Facility (request dated January 1993).

3. The addition of waste codes requested in July 1993 for HEPA filters in storage at TSA-3 and the Intermediate-Level Transuranic Storage Facility.

4. The addition of carbon absorption and cyclone separation to the TAN-666 Treatment Unit.

5. The administrative closure of the ARVFS Chemical Treatment Unit is approved and the unit is dropped from the Part A (requested August 1994).

6. The addition of sodium storage in the ANL-W Boiler Building Drain Tank requested December 1994.

7. The addition of the D002 waste code and associated "pH adjustment" to the Portable Water Treatment Unit requested November 2, 1992.

8. The modification of the Portable Water Treatment Unit to improve system operation requested January 15, 1993.

9. CPP-601/627 High Level Container Storage capacity increase to 608 kilograms requested to conduct calcine treatability studies on June 18, 1993, provided the DOE complies with the reporting requirements of IDAPA 16.01.05.005 [40 CFR §261.4(e)].

10. Deletion of the CPP-619 Hazardous Waste Compactor, NO_x Abatement Storage Tanks and the FPR Storage Tank from the Part A because the units have and will not be constructed due to a mission change at ICPP.

11. Deletion of the CPP-659 NWCF Organic Solvent Storage Tanks from the Part A because the wastes managed (tributyl phosphate, n-dodecane) are not, in accordance with IDAPA 16.01.05.005, hazardous waste.

12. Addition of waste codes to the following: CPP-659 NWCF HEPA Filter Storage; CPP-601/627 Container Storage; CPP-659 NWCF HEPA Leaching System; CPP-666 FAST HEPA Filter Storage; CPP-1617 Radioactive Mixed Waste Staging Facility; and, CPP-1619 Hazardous Chemical and Radioactive Waste Storage Facility requested February 4, 1994.

13. CPP-659 NWCF HEPA Filter Leaching System redesign to include a drying "tank."

14. Deletion of the 2B Chemical/Thermal Treatment Unit from the Part A because the unit manages only non-hazardous radioactive wastes.

15. Deletion of the TAN-679 and TAN-607 Oxidation Ovens from the Part A Application. The units are excluded from hazardous waste regulation because they only process Atomic Energy Act source material which, by definition (IDAPA 16.01.05.005 [40 CFR §261.4(a)(4)]), is not solid waste.

16. Addition of the EBR-II Reactor Intermediate Heat Exchanger and Cold Trap at ANL-W. The facility shall submit a proposed inspection procedure for the heat exchanger to the DEQ for review/approval within thirty (30) days of the receipt of this letter.

17. Capacity increase at TAN-628 Hazardous Waste Storage Area for container storage to 33,000 gallons from 13,000 gallons.

18. Capacity increase for the WERF Waste Storage Building from 70,000 gallons to 181,026 gallons.

19. Addition of 22 cubic meters of container storage of the RWMC waste codes for the Waste Characterization Facility is authorized because the requested change is necessary to comply with federal, state or local requirements.

ENCLOSURE 2

The following requested modifications to the INEL Part A permit are hereby denied:

1. Neutralization at WEDF requested on January 15, 1993, because the request does not supply sufficient information about the process(es) to be utilized as required by IDAPA 16.01.05.012 [40 CFR §270.13] (i.e., what reagents may be used to treat the wastes?; what is the maximum volume to be treated in a container?; etc.).

2. Amalgamation at WEDF requested on January 15, 1993, because the request does not supply sufficient information about the amalgamation process as required by IDAPA 16.01.05.012 [40 CFR §270.13] (submit a general description of the process and process equipment).

3. Macroencapsulation at WEDF requested on January 15, 1993, because the request does not describe the macroencapsulation process as required by IDAPA 16.01.05.012 [40 CFR §270.13].

4. Treatment by stabilization, neutralization, amalgamation, and absorption at the Waste Characterization Facility is denied because the request does not supply sufficient information about the processes to be utilized, as required by IDAPA 16.01.05.012 [40 CFR §270.13]. Further, the current Part A application does not correctly describe the treatment capacities of the unit in terms of throughput per unit of time (gallons or liters per day).

5. Radioactive Sodium Storage Facility expansion and addition of waste codes requested September 14, 1994, because the unit has a final Part B permit. The DOE must modify the Part B permit, in accordance with IDAPA 16.01.05.012 [40 CFR 270 Subpart D].

6. Capacity increase for Percolation Pond #1 at ICPP is denied pending resolution of the ongoing enforcement action(s) against the percolation ponds (see IDAPA 16.01.05.009 [40 CFR §265.113(d)(2)(v)].

7. Capacity increase, requested February 4, 1994, for the following units: a) CPP-604 PEW Feed/Storage Tanks; b) CPP-604 PEW Evaporators; c) CPP-633 WCF High Level Waste Evaporator Storage Tanks; d) CPP-659 NWCF Evaporator Tank System; e) CPP-659 NWCF Storage & Treatment Tanks; and, f) CPP-659 NWCF Calciner until such time as DOE can demonstrate that the increase does not further complicate apparent LDR compliance issues (i.e., this treatment technology is

consistent with the requirements of IDAPA 16.01.05.011 [40 CFR Part 268]).

8. The addition of waste codes, requested February 4, 1994, in support of the site wide waste analysis plan for the following units: CPP 601 WG/WH Cells Storage and Treatment Tanks; CPP-604 PEW Feed/Storage & Treatment Tanks; CPP-604 PEW Evaporators; CPP-604 Condensate/Feed Storage Tanks; CPP-659 NWCF Storage and Treatment Tanks; CPP-659 NWCF Evaporator Tank System; CPP-659 NWCF Calciner; CPP-1618 LET&D Evaporators; CPP-1618 Nitric Acid Recycle Tank; Calcine Solid Storage Facility; ICPP Tank Farm; and, ICPP New Tank Farm. It appears that these units are not capable of satisfying both the Land Disposal Restriction treatment requirements (IDAPA 16.01.05.011 [40 CFR 268]) and the requirements of IDAPA 16.01.05.008 [40 CFR 264 Subpart AA]. [NOTE: The DEQ does not have a description of the WG/WH Cells in order to make a favorable determination for this unit.]

9. All aspects of both the CPP-659 NWCF Decontamination Area Debris Treatment and Containment Building Storage and the WEDF Containment Building Debris Storage and Treatment is deferred to Region 10 of the Environmental Protection Agency because Idaho is not yet authorized to administer these requests.

10. Authorization to operate the Portable Water Treatment Unit at multiple locations. Should DOE wish to relocate the PWTU, DOE must demonstrate, at a minimum, the following:

    a. the unit has not released hazardous constituents to the environment at the present location;
    b. the unit can be relocated without endangering human health or the environment; and,
    c. the proposed location for the unit satisfies the location requirements of IDAPA 16.01.05.012 [40 CFR §270.13].

DEQ CLOSURE APPROVAL OF INTERIM STATUS UNITS

DEQ Closure Approval Letters for RCRA Interim Status Units

CONTENTS

Date of Letter	Subject of Letter
May 23, 2023	Idaho DEQ reviewed the closure certification for the Advanced Mixed Waste Treatment Project (AMWTP) HWMA/RCRA Transuranic Storage Area (TSA) Interim Status Unit/Document and determined that closure was completed in accordance with the plan. Therefore, in accordance with IDAPA 58.01.05.009, DEQ approved certification of closure.
October 5, 2009	Idaho Department of Environmental Quality (DEQ) reviewed the closure certification for Phase 1 through Phase IV of Tank Farm Facility Tanks (VES-WM-180 through VES-WM-186 and VES-WM-103 through VES-WM-106). DEQ determined that Phase I-IV closures were completed in accordance with the plan except for the minor deviations noted in the Professional Engineer's Certification. Therefore, in accordance with IDAPA 58.01.05.009 DEQ approved certification of closure.
May 12, 2009	DEQ reviewed the closure certification and supporting documents of the CPP-648 Radioactive Solid and Liquid Waste Storage Tank System (VES-SFE-106) and acknowledges the completion of the activities specified in the approved closure plan.
June 12, 2008	DEQ reviewed the closure certification of the CPP-640 Headend Storage Tank System and determined that all the requirements of IDAPA 58.01.05.009 were met and therefore approved closure of the unit. (Closure of this unit terminated interim status of the unit.)
October 25, 2006	DEQ acknowledges removal of the INTEC New Tank Farm Unit from the Part A Permit Application (Volume 1) and approves its final administrative disposition thereby terminating interim status of the unit.
January 5, 2005	DEQ acknowledgement of completion of the activities specified in the approved D-Cell Closure Plan.
December 14, 2004	DEQ determination that the New Waste Calcining Facility [(NWCF) Calciner Vessel and dedicated Ancillary Equipment] Closure was completed according to the approved closure plan.
May 10, 2004	DEQ acknowledgement of completion of the activities specified in the approved Closure Plan for the MWSF Repackaging Unit.
January 9, 2004	DEQ concurrence with the information presented in the clean closure certification for the TAN-647 Storage Unit.
September 30, 2003	DEQ acknowledgement of completion of activities as specified in the approved closure plans for the WERF Repackaging Unit, WERF Drum Feed/Blending Unit, and the WERF Waste Stabilization Unit.

Date of Letter	Subject of Letter
September 25, 2000	DEQ acknowledgement of final administrative disposition of the plans for construction of the Waste Characterization Facility (WCF) at the Radioactive Waste Management Complex (RWMC).
May 16, 2000	DEQ acknowledgement of final administrative disposition of the plans for construction of the Waste Experimental Reduction Facility (WERF), Waste Reduction Operations Complex (WROC) Waste Storage/Feed Tanks Unit.
March 7, 2000	DEQ acknowledgement of the completion of the activities specified in the approved Closure Plan for the Process Experimental Pilot Plant (PREPP) Incinerator and Waste Stabilization Units, located at the Test Area North (TAN).
January 31, 2000	DEQ acknowledgement of the completion of the activities specified in the approved Closure Plan for the Heat Transfer Reactor Experiment (HTRE-3), located at the Experimental Breeder Reactor-I (EBR-I) facility.
November 2, 1999	DEQ acknowledgement of the completion of the activities specified in the approved Closure Plan for the Waste Calcining Facility (WCF), located at the Idaho Nuclear Technology and Engineering Center (INTEC). The Comprehensive Environmental Response, Compensation, and Liability Act (CERCLA) program will address the substantive postclosure care requirements for the WCF.
July 20, 1999	DEQ approval of the administrative closure request for the Multicurie Cell (MCC), located at the INTEC. Interim status terminated.
July 8, 1999	DEQ acknowledgement of the completion of the activities specified in the approved Closure Plan for the TAN and the WROC Portable Water Treatment Unit (PWTU). Interim status terminated.
April 16, 1999	DEQ acknowledgement of the completion of the activities specified in the approved Certified and Segregated Building (C&S) and Air Support Building-II (ASB-II) Closure Plan. Interim status for these units terminated.
December 2, 1997	DEQ acknowledgement of the completion of closure activities for the Waste Experimental Development Facility (WEDF) stabilization and storage units in accordance with the specifications in the approved closure plan. Interim status for these units terminated.
September 24, 1997	DEQ acknowledgement that the Specific Manufacturing Capability (SMC) Waste Acid Calciner Units were closed in accordance with the specifications in the approved closure plan. Interim status of these units terminated.
June 13, 1997	DEQ acknowledgement that the TAN-647 Sodium Storage Unit was closed in accordance with the specifications of the approved closure plan. Interim status for this unit terminated.

Date of Letter	Subject of Letter
February 25, 1997	DEQ termination of interim status for the Naval Ordinance Disposal Area (NODA), based on the information submitted and site inspection that all hazardous wastes and hazardous waste residues have been removed. The CERCLA program shall perform the final evaluation of the site in accordance with the Federal Facilities Agreement/Consent Order (FFA/CO).
February 25, 1997	DEQ acknowledgement of the completion of the activities specified in the approved TAN-607A Closure Plan. Interim status for this unit terminated.
December 20, 1996	DEQ acknowledgement of the completion of the activities specified in the approved Initial Engine Test Mercury (IET Hg) Storage Unit Closure Plan and the approved TAN-681 Evaporator Units Closure Plan. Interim status for these units terminated.
September 12, 1996	DEQ acknowledgement of the completion of the activities specified in the approved closure plan for the Army Reentry Vehicle Facility Site (ARVFS) NaK Storage Unit. Interim status for this unit terminated.
May 13, 1996	DEQ acknowledgement that the Fluorinel Dissolution Process (FDP) Waste Tanks (VES-FA-141, -142) have been closed in accordance with the requirements of the approved closure plan. Interim status for these units terminated.
December 26, 1995	DEQ acknowledgement that the TAN 726 Chromate Water Storage Unit and the TAN 726A Treatment Unit have both been closed in accordance with the specifications in the approved closure plan. Interim status for these units terminated.
November 29, 1995	DEQ acknowledgement that the Idaho Chemical Processing Plant (ICPP) Percolation Ponds #1 and #2 are “clean closed” in accordance with all the terms and conditions of the approved closure plan for the Percolation Ponds.
October 27, 1995	DEQ acknowledgement that the Test Reactor Area (TRA) 610 Lead Storage Unit has been closed in accordance with the specifications in the approved closure plan. Interim status for this unit terminated.

Note: The primary purpose of this section is to provide copies of the DEQ’s correspondence with regard to the approval of RCRA closure for interim status units at the Idaho National Laboratory (INL). This information should not be viewed as being all inclusive of correspondence among the INL contractors, the Department of Energy Idaho Operations Office (DOE-ID), and the DEQ with regard to the closure of Resource Conservation and Recovery Act (RCRA) interim status units at the INL.

CCN 330913

1410 N Hilton Street
Boise, ID 83706 • (208) 373-0502

Brad Little, Governor
Jess Byrne, Director

May 23, 2023

Nicole Hernandez
U.S. Department of Energy
Idaho Operations Office
1955 Fremont Avenue
Idaho Falls, Idaho 83415

Subject: Response to Professional Engineer Certification and Supporting Documentation for Closure of the Transuranic Storage Area Retrieval Enclosure (TSA-RE) Interim Status Units at the Advanced Mixed Waste Treatment Project (AMWTP) on the Idaho National Laboratory, EPA ID# ID4890008952

Ms. Hernandez:

The Department of Environmental Quality (DEQ) has reviewed the Professional Engineer certification and supporting documents for the Hazardous Waste Management Act Closure of the TSA-RE interim status units at AMWTP, received on April 25, 2023.

Based on DEQ's review of the required certification, supporting documents, and visual verification conducted on May 9, 2023, it appears the requirements in IDAPA 58.01.05.009 [40 CFR 265 Subpart G] and the Closure Plan have been met.

If you have any questions, please contact Garrett Bright at (208) 373-0163 or garrett.bright@deq.idaho.gov.

Sincerely,

Daryl Sawyer Digitally signed by Daryl Sawyer
Date: 2023.05.22 11:43:13 -06'00'

Daryl Sawyer
Hazardous Waste Permit Supervisor
Waste Management and Remediation Division

DS/GB

ec: Mary Winsor, EPA Region 10
Brent Burton, IEC
Kerry Neil, DEQ STO
Mark Clough, DEQ STO
Natalie Walker, DEQ STO
Rensay Owen, DEQ IFRO

STATE OF IDAHO
DEPARTMENT OF
ENVIRONMENTAL QUALITY

RECEIVED
OCT 1 2 2009

CCN 309265

1410 North Hilton • Boise, Idaho 83706 • (208) 373-0502

C.L. "Butch" Otter, Governor
Toni Hardesty, Director

October 5, 2009

Mr. Dave Wessman
DOE – Idaho Operations Office
1955 Fremont Avenue
Idaho Falls ID 83415

Subject: Approval of HWMA/RCRA Closure Certifications Covering the Grouting of the Idaho Nuclear Technology and Engineering Center Tank Farm Facility Phases I-IV – Tanks WM-180, WM-181, WM-182, WM-183, WM-184, WM-185, WM-186, WM-103, WM-104, WM-105, and WM-106 - on the Idaho National Laboratory (EPA ID No. ID4890008952)

Dear Mr. Wessman:

The Department of Environmental Quality (DEQ) received the Phase I-IV Closure Certifications addressing grouting of the identified Tank Farm Facility (TFF) Tanks and ancillary equipment at the Idaho Nuclear Technology and Engineering Center on the Idaho National Laboratory on September 1, 2009. These Phase I-IV certifications, combined with the pre-grout certifications (received by DEQ on April 24, 2009), constitute the Professional Engineer's Certifications of Closure in accordance with the approved plans.

A summary of the phases is outlined below:

- Phase I of the TFF Closure addressed Tanks WM-182 and WM-183 and ancillary equipment specific to only these tanks. The public comment period for the November 2001 Plan began on March 15, 2002 and closed on April 15, 2002. DEQ approved the Plan on April 18, 2002. Minor revisions to the plan were submitted to DEQ on November 13, 2008 and the changes were approved by DEQ on December 22, 2008.

- Phase II of the TFF Closure addressed Tanks WM-184, WM-185, and WM-186 and associated ancillary equipment. The public comment period on the September 2003 plan began on November 14, 2003. DEQ approved the plan on February 25, 2004. Minor revisions to the plan were submitted to DEQ on November 20, 2008 and the changes were approved by DEQ on December 22, 2008.

- Phase III of the TFF Closure addressed Tanks WM-103, WM-104, WM-105, WM-106, and WM-181 and associated ancillary equipment. The public comment period on the May 2004 plan began on June 18, 2004. After a request for a public hearing was received, DEQ extended the public comment period through the September 9, 2004 public hearing. DEQ delayed approval of the Closure Plan pending the resolution of radioactive waste characterization issues. The issues were resolved and the Plan approved on September 1, 2006. Minor revisions to the closure plan were submitted to DEQ on November 25, 2008 and approved by DEQ on December 22, 2008.

- Phase IV of the TFF Closure addressed WM-180 and ancillary equipment. The public notice of this plan was combined with the Phase III notice of public hearing. Since that August 10, 2004 date all milestone dates of Phase IV have been concurrent with Phase III.

DEQ has completed a review of the closure certification and determined the Phase I-IV closures have been completed in accordance with the plan except for the minor deviations noted in the Professional Engineer's Certification. DEQ conducted verification of the closure during a September 30, 2009 site visit. The Phase V Closure Plan addresses the four remaining Tanks and must include all remaining and newly identified HWMA/RCRA lines subject to closure.

In accordance with IDAPA 58.01.05.009 [40 CFR § 265.115], the DEQ hereby approves the certification of closure. Since INL is a federal facility there is no release from financial assurance associated with this closure (See 40 CFR §265.115 and 40 CFR §265.143(h)).

If you have any questions or comments concerning this matter, please contact Robert Bullock at (208) 373-0502.

Sincerely,

Brian R. Monson
Hazardous Waste Program Manager
Waste Management and Remediation Division

BRM:js Apprvll IVPECert

cc: Zach Hedgpeth, EPA 10
Robert Bullock, STO
Rensay Owen, DEQ IFRO
Dave Hutchinson, CWI
INiptc8/B. English
COF

STATE OF IDAHO
DEPARTMENT OF
ENVIRONMENTAL QUALITY

RECEIVED
MAY 14 2009

CCN 308531

1410 North Hilton • Boise, Idaho 83706 • (208) 373-0502

C.L. "Butch" Otter, Governor
Toni Hardesty, Director

May 12, 2009

Mr. David L. Wessman
VCO Project Manager
U.S. Department of Energy
Idaho Operations Office (NE-ID)
1955 Fremont Ave. Mail Stop 1216
Idaho Falls, ID 83415

RE: Closure Certification of the CPP-648 Radioactive Solid and Liquid Waste Storage Tank System (VES-SFE-106), Idaho National Laboratory, EPA ID No. ID4890008952

Dear Mr. Wessman:

On January 23, 2009, the Department of Environmental Quality (DEQ) received the Hazardous Waste Management Act (HWMA)/Resource Conservation and Recovery Act (RCRA) Closure Certification for the CPP-648 Radioactive Solid and Liquid Waste Storage Tank System (VES-SFE-106).

The DEQ reviewed the certification and supporting documents and on March 10, 2009, requested additional information. An April 22, 2009 Department of Energy (DOE) letter provided clarifying information. An inspection of the unit was conducted by DEQ on April 7, 2009.

Based upon review of the required certification, supporting documentation, and unit inspection, DEQ hereby acknowledges completion of the activities specified in the approved HWMA/RCRA Closure Plan for the CPP-648 Radioactive Solid and Liquid Waste Storage Tank System (VES-SFE-106).

As a result of this closure, the CPP-648 Radioactive Solid and Liquid Waste Storage Tank System (VES-SFE-106) no longer has interim status to operate as a mixed waste storage facility under IDAPA 58.01.05.009 [40 CFR Part 265].

If you have any questions, please contact Natalie Clough at (208) 373-0506.

Sincerely,

Robert E. Bullock
Hazardous Waste Permits Manager
Waste Management & Remediation Division

REB/NC/js SFE106ClsrCert

cc: Zach Hedgpeth, U.S. EPA – Region 10
Rensay Owen, DEQ IFRO
Mary Magelby, CWI
INipvw
COF

Printed on Recycled Paper

STATE OF IDAHO
DEPARTMENT OF
ENVIRONMENTAL QUALITY

1410 North Hilton • Boise, Idaho 83706 • (208) 373-0502

06-16-08 P12:03 IN

CCN 306949

C.L. "Butch" Otter, Governor
Toni Hardesty, Director

June 12, 2008

Mr. David L. Wessman
U.S. Department of Energy
Idaho Operations Office (NE-ID)
1955 Fremont Ave.
Idaho Falls, ID 83401-1216

RE: Approval of the Closure Certification for the CPP-640 Headend Storage Tank System at INTEC on the Idaho National Laboratory, EPA ID No. ID4890008952

Dear Mr. Wessman:

The Department of Environmental Quality (DEQ) is in receipt of the June 2, 2008 Closure Certification for the CPP-640 Headend Storage Tank System. The certification indicates that the Headend Storage Tank System was successfully clean closed.

DEQ has reviewed the closure certification and found that it meets the requirements of IDAPA 58.01.05.009 [40 CFR § 265.115] and is therefore approved. In accordance with DEQ's December 28, 2007 letter approving the Class 1 Permit Modification, the date of this letter constitutes day one of the closure schedule for the CPP-641 Westside Waste Hold-up Tanks.

If you have any questions, contact Brian English at (208) 373-0425.

Sincerely,

for John H. Bruck

Brian R. Monson
Hazardous Waste Program Manager
Waste Management and Remediation Division

BRM:BE:js CPP640HeadendClsrApprvl

cc: Jeff Hunt, EPA Region 10
Rensay Owen, Idaho Falls Regional Office
Kliss McNeel, CWI
INppew
COF

STATE OF IDAHO
DEPARTMENT OF
ENVIRONMENTAL QUALITY

10-25-06 PM 3:42 RCVD

CCN 303738

1410 North Hilton • Boise, Idaho 83706 • (208) 373-0502

James E. Risch, Governor
Toni Hardesty, Director

October 25, 2006

Mr. Tim Safford
U. S. Department of Energy
Idaho Operations Office (NE-ID)
1955 Fremont Avenue
Idaho Falls, ID 83401-1216

SUBJECT: Interim Status Part A Permit Application, Volume 1, Revision August, 2006.
Idaho National Laboratory (INL), EPA ID No. ID4890008952

Dear Mr. Safford:

The Department of Environmental Quality (DEQ), in accordance with IDAPA 58.01.05.012 [40 CFR §§ 270.13 and 270.72], has reviewed the August 2006 update to the Hazardous Waste Management Act (HWMA)/Resource Conservation and Recovery Act (RCRA) Interim Status Part A Permit Application, Volume 1, for the Idaho National Laboratory (INL). This revision was completed to remove the proposed interim status unit "INTEC New Tank Farm" from the document.

Based upon review of the submittal, DEQ acknowledges removal of the above proposed unit and approves the revised Part A Permit Application. This letter constitutes final administrative disposition of the INTEC New Tank Farm. In accordance with IDAPA 58.01.05.012 [40 CFR § 270.73(a)], interim status for this unit is hereby terminated.

If you have any questions, please contact Natalie McLeod at (208) 373-0506.

Sincerely,

for Robert E. Bullock
Hazardous Waste Program Coordinator
Waste Management and Remediation Division

REB\NM\js c:/INLVol1Aug2006RespLtr

cc: Jeff Hunt, EPA Region 10
Kathleen Trever, INL Oversight
Rensay Owens, IFRO
Kliss McNeil, CWI
Carolyn Mascarenas, BEA
INppa/Natalie McLeod
COF

STATE OF IDAHO
DEPARTMENT OF
ENVIRONMENTAL QUALITY

CCN 54339

1410 North Hilton • Boise, Idaho 83706-1255 • (208) 373-0502

Dirk Kempthorne, Governor
C. Stephen Allred, Director

January 5, 2005

CERTIFIED MAIL # :7099 3220 0009 1975 0283
RETURN RECEIPT REQUESTED

Dave Wessman
Idaho Operations Office
1955 Fremont Ave
Idaho Falls, Idaho 83401-1216

RE: Closure Certification of the D-Cell Container Storage Unit at INTEC on the Idaho National Engineering and Environmental Laboratory, EPA ID No. ID4890008952

Dear Mr. Wessman:

The Idaho Department of Environmental Quality has reviewed the revised closure certification and supporting documents received on December 10, 2004. With the photos provided and due to the potential for unnecessary exposure to radioactive materials, the DEQ has chosen not to conduct a closure inspection.

Based upon review of the required certification, DEQ hereby acknowledges completion of the activities specified in the approved D-Cell Closure Plan.

This letter constitutes final administrative disposition of the D-Cell as operated at the INTEC. In accordance with IDAPA 58.01.05.012 [40 CFR § 270.73(a)], interim status for this unit is hereby terminated.

If you have any questions or comments, please contact Ms. Beth McPherson at (208) 373-0502.

Sincerely,

Robert D. Bullock
Hazardous Waste Permit Manager
Waste Management and Remediation Division

REB/BAM/tg c:\...\beth\approval of d-cell closure certification 1-05.doc

cc: Jeff Hunt, U.S. EPA - Region 10
Carolyn S Mascarenas, BBWI
Keith D. Davis, PE
COF
Rensay Owen, DEQ-Idaho Falls
Sue Evans, BBWI
INipdcc\B. McPherson

STATE OF IDAHO
DEPARTMENT OF
ENVIRONMENTAL QUALITY

CCN 54116

1410 North Hilton • Boise, Idaho 83706-1255 • (208) 373-0502

Dirk Kempthorne, Governor
Toni Hardesty, Director

December 14, 2004

Mr. Tim Safford
U.S. Department of Energy
Idaho Operations Office (NE-ID)
1955 Fremont Avenue
Idaho Falls, Idaho 83401-1216

Re: New Waste Calcining Facility (NWCF) Closure Certification and Associated Approval of a Class 3 Permit Modification for the Volume 18 HWMA/RCRA Storage and Treatment Partial Permit for the Idaho Nuclear Technology and Engineering Center (INTEC) at the Idaho National Engineering and Environmental Laboratory, EPA ID No. ID4890008952.

Dear Mr. Safford:

The Department of Environmental Quality (DEQ) has reviewed the Closure Certification for the New Waste Calcining Facility dated October 5, 2004, and December 1, 2004 letter clarifying line isolation issues associated with the Certification.

DEQ has determined that the NWCF (Calciner Vessel and dedicated Ancillary Equipment) Closure has been completed according to the Closure Plan approved November 19, 2002. As a result of this closure, the NWCF no longer has interim status to operate as a mixed waste treatment facility under IDAPA 58.01.05.009 [40 CFR Part 265].

Due to the nature of the closed equipment, the facility requested decommissioned equipment remain in storage in Building CPP-659. The Department of Energy has requested a Class 3 permit modification to the Volume 18 Partial Permit to address this equipment.

A public notice proposing approval of the permit modification appeared in *The Post Register* of Idaho Falls and *The Idaho Statesman* of Boise. The purpose of the public notice was to announce the Department of Environmental Quality's (DEQ) decision to approve the proposed permit modification and to allow the public and other interested parties the opportunity to comment on the same. A 45-day public comment period began on October 8, 2004 and ended on November 29, 2004.

Having fully considered the Department of Energy's request to modify the Volume 18 Partial Permit, and having provided opportunity for public participation, the DEQ hereby approves the modified Partial Permit with one change. The enclosure describes the change. The change affects

the modification request but does not necessitate modifying any permit conditions. The change impacts one paragraph in Attachment 1 to more clearly document the transition of the NWCF from an operational interim status unit to decommissioned stored equipment.

No comments were received on the draft Partial Permit and since the change does not impact the permit conditions and requirements, the modified Partial Permit is effective immediately (in accordance with IDAPA 58.01.05.013 [40 CFR § 124.15(b)]).

If you have any questions concerning the INTEC Storage and Treatment Permit, please contact me at (208) 373-0502.

Sincerely,

Brian R. Morgan
Hazardous Waste Program Manager
Waste Management and Remediation Division

BRM:BLE:tg c:\...\brian e\nwcf closed.doc

enclosure

cc: J. Hunt, EPA Region 10
R. Owen, DEQ-Idaho Falls
K. Trevor, INEEL Oversight
C. Mascarenas, BBWI
INpv18 and INipnw\B. English, G. Adamson
COF

Enclosure

Attachment 1, Section D-3a., first paragraph which read:

Pending closure of Building CPP-659, the equipment described in the approved HWMA/RCRA Partial Closure of the New Waste Calcining Facility (Calciner System) will be considered waste piles. The equipment includes: calciner feed tank (VES-NCC-104), calciner vessel (VES-NCC-105), high efficiency cyclone (VES-NCC-107), quench tower (VES-NCC-109), adsorbers (VES-NCC-112, VES-NCC-113, and VES-NCC-114), knockout drum (VES-NCC-143-1-2 and VES-NCC-143-2-2), off-gas compressors (BLO-NCC-243-1-2 and BLO-NCC-243-2-2), and ancillary equipment.

Has been revised to read:

Pending closure of Building CPP-659, the equipment described in the approved HWMA/RCRA Partial Closure of the New Waste Calcining Facility (Calciner System) will be considered debris stored in waste piles. The debris includes: calciner feed tank (VES-NCC-104), calciner vessel (VES-NCC-105), high efficiency cyclone (VES-NCC-107), quench tower (VES-NCC-109), adsorbers (VES-NCC-112, VES-NCC-113, and VES-NCC-114), knockout drum (VES-NCC-143-1-2 and VES-NCC-143-2-2), intercoolers (HE-NCC-343-1 and HE-NCC-343-2), and ancillary equipment.

STATE OF IDAHO
DEPARTMENT OF
ENVIRONMENTAL QUALITY

CCN 50055

1410 North Hilton • Boise, Idaho 83706-1255 • (208) 373-0502

Dirk Kempthorne, Governor
C. Stephen Allred, Director

May 10, 2004

Mr. Tim Safford
Idaho Operations Office (NE-ID)
U.S. Department of Energy
1955 Fremont Avenue
Idaho Falls, Idaho 83401-1216

RE: Approval of the HWMA/RCRA Closure Certification of the Mixed Waste Storage Facility-Repackaging Room (MWSF-RR) at the Idaho National Engineering and Environmental Laboratory, EPA ID No. ID4890008952

Dear Mr. Safford:

The Department of Environmental Quality (DEQ) inspected the MWSF-RR on May 5, 2004, as the final disposition for clean closure.

Based on this inspection, DEQ acknowledges completion of the activities specified in the approved Closure Plan for the MWSF-RR.

If you have any questions or comments, please contact Mr. Gary Adamson at (208) 373-0316.

Sincerely,

Brian R. Monson
Hazardous Waste Program Manager
Waste Management & Remediation Division

BRM\GA:ls \MWSFRR\2004\MWSF-RR Clean Closure Approval.doc

cc: Jeff Hunt, EPA Region 10
Carolyn Mascarenas, BBWI
Rensay Owen, Idaho Falls R.O.
INmwc
COF

CCN 47265

STATE OF IDAHO
DEPARTMENT OF
ENVIRONMENTAL QUALITY

1410 North Hilton • Boise, Idaho 83706-1255 • (208) 373-0502

Dirk Kempthorne, Governor
C. Stephen Allred, Director

January 9, 2004

Mr. Dave Wessman
Idaho Operations Office (NE - ID)
U.S. Department Of Energy
1955 FREMONT AVENUE
Idaho Falls, Idaho 83401-1216

RE: Approval of the HWMA/RCRA Closure Certification of the Test Area North (TAN) Building 647 at the Idaho National Engineering and Environmental Laboratory (EPA ID No. ID4890008952)

Dear Mr. Wessman:

The Department of Environmental Quality (DEQ) has reviewed the Closure Certification Report for the TAN-647 Storage Building received on September 29, 2003.

Based on this review and the site visit conducted December 10, 2003, DEQ concurs with the information presented in the clean closure certification.

If you have any questions or comments, please contact Mr. Gary Adamson at (208) 373-0316.

Sincerely,

Brian R. Monson
Hazardous Waste Program Manager
Waste Management & Remediation Division

BRM\GA:ls \Tan\2004\TAN 647 Closure.doc

cc: J. Hunt, EPA Region 10
C. Mascarenas, BBWI
K. Trever, INEEL Oversight
INptancp
COF

CCN 45457

STATE OF IDAHO
DEPARTMENT OF
ENVIRONMENTAL QUALITY

1410 North Hilton • Boise, Idaho 83706-1255 • (208) 373-0502

Dirk Kempthorne, Governor
C. Stephen Allred, Director

September 30, 2003

Mr. Dave Wessman
Idaho Operations Office
Department of Energy
850 Energy Drive
Idaho Falls, Idaho 83401-1563

RE: HWMA/RCRA Closure Certification for the Waste Experimental Reduction Facility (WERF) Hazardous Waste Management Units at the Idaho National Engineering and Environmental Laboratory (INEEL, EPA ID No. ID4890008952)

Dear Mr. Wessman:

The Department of Environmental Quality (DEQ) has reviewed the Closure Certification Report, received September 29, 2003, for the following hazardous waste management units located at the WERF:

1. WERF Incinerator (Building PER-609);
2. WERF Drum Feed/Blending Unit (Room 111A, PER-609);
3. WERF Stabilization Units (2 Units, Rooms B106 and 109, PER-609); and
4. WERF Repackaging Unit (Room B102, PER-609).

Based on this review and the site visit conducted August 18, 2003, DEQ concurs with the Department of Energy's finding that closure was completed in accordance with the approved plans.

This letter completes the actions associated with the October 2001 Denial of the WERF Incinerator Part B Permit Application. Interim status for the Stabilization Units and the Repackaging Unit has been terminated, in accordance with IDAPA 58.01.05.012 [40 CFR § 270.73], and these units have been added to the closed portion of the INEEL facility (see IDAPA 50.01.05.004 [40 CFR § 260.10]).

If you have any questions or comments, please contact Mr. Brian English at (208) 373-0425.

Sincerely,

Brian R. Monson, Hazardous Waste Program Mgr.
Waste Management and Remediation Division

BRM\BLE:ls \Wer\2003\WERF Units Closure Approval

cc: Jeff Hunt, EPA Region 10
Catherine Massimino, EPA Region 10
Ron Guymon, BBWI
Kathleen Trever, INEEL Oversight
Rensay Owen, Idaho Falls R.O.
INpwi
COF

STATE OF IDAHO
DEPARTMENT OF
ENVIRONMENTAL QUALITY

1410 North Hilton • Boise, Idaho 83706-1255 • (208) 373-0502

Dirk Kempthorne, Governor
C. Stephen Allred, Director

SEP 27 2000

CERTIFIED RETURN RECEIPT # 7099 3220 0006 2680 9892

September 25, 2000

Mr. David L. Wessman
DOE Idaho Operations Office
850 Energy Drive
Idaho Falls, ID 83401-1563

Re: Request for Administrative Closure of the Waste Characterization Facility (WCF) at the Radioactive Waste Management Complex (RWMC), Idaho National Engineering and Environmental Laboratory (INEEL), EPA ID No. ID4890008952

Dear Mr. Wessman:

The Department of Environmental Quality (DEQ) has reviewed your request for administrative closure the WCF at the RWMC. Based upon review of the INEEL RCRA Part A Permit Application and additional information provided, DEQ recognizes that the WCF was proposed for construction but was never constructed.

DEQ hereby acknowledges final administrative deposition of the plans for construction of the WCF. Because the action is "Administrative" in so much as it addresses a unit that was never constructed, the interim status termination requirements under IDAPA 58.01.05.013 [40 CFR § 124] do not appear relevant or applicable. This action constitutes final administrative deposition of the WCF. The next revision of the INEEL RCRA Part A Permit Application shall affect removal of the WCF from the Part A.

If you have any questions concerning this matter, please contact Vivien Hall at 208-373-0137.

Sincerely,

Robert E. Bullock
Hazardous Waste Permitting Manager
Waste Management and Remediation Division

BRM:VH:sjt H:\DATA\WP61\PAUL_W\V_HALL\WCF-CLOS.WPD

cc: Jeff Hunt, EPA Region 10
Kathleen Trever, INEEL Oversight
Rensay Owen, Idaho Falls Regional Office
Ronald H. Guymon, BBWI
INppa
TSCE Reading File

CCN FY 00-009360

MAY 22 2000

STATE OF IDAHO
DIVISION OF
ENVIRONMENTAL QUALITY

1410 North Hilton • Boise, Idaho 83706-1255 • (208) 373-0502

Dirk Kempthorne, Governor
C. Stephen Allred, Administrator

May 16, 2000

CERTIFIED MAIL #: Z 187 980 284
RETURN RECEIPT REQUESTED

Dave Wessman
DOE - Idaho Operations Office
850 Energy Drive
Idaho Falls, ID 83401-1563

Re: Request for Administrative Closure of the Waste Storage/ Feed Tanks Unit in the Waste Experimental Reduction Facility(WERF), Waste Reduction Operations Complex (WROC), Idaho National Engineering and Environmental Laboratory (INEEL), EPA ID No IDD4890008952.

Dear Mr. Wessman:

The DEQ has reviewed your request for administrative closure of the Waste Storage/Feed Tanks Unit at the WERF facility. Based upon review of the Part A Permit Application and additional information provided, DEQ recognizes that the unit was proposed for construction to replace the WERF Drum Feed/Blending unit but was never constructed.

DEQ hereby acknowledges final administrative disposition of the plans for construction of the WERF/WROC Waste Storage/Feed Tank unit. Because this action is "Administrative" in so much as it addresses a unit that was never constructed, the interim status termination requirements under IDAPA 16.01.05.013 [40 CFR § 124] do not appear relevant or applicable. This action constitutes final administrative deposition of the WERF/WROC Waste Storage/Feed Tank.

As per our discussions on April 10, 2000, DOE plans to close the existing WERF Drum Feed/Blending unit and all ancillary equipment associated with that unit within one (1) year.

If you have any questions or comments, please contact Dinah Reaney at 208/373-0426.

Sincerely,

Brian R. Monson
Hazardous Waste Program Manager
State Waste Management & Remediation Program Office

BRM/DER/tg bobINEELWERFCERT.LTR

cc: Jeff Hunt, EPA Region 10
INppa
Rensay Owen, IFRO
COF

Printed on Recycled Paper

STATE OF IDAHO
DIVISION OF
ENVIRONMENTAL QUALITY

MAR 0 9 2000

1410 North Hilton • Boise, Idaho 83706-1255 • (208) 373-0502

Dirk Kempthorne, Governor
C. Stephen Alfred, Administrator

March 7, 2000

CERTIFIED MAIL #Z 269 575 138

Mr. Dave Wessman
DOE - Idaho Operations Office
850 Energy Drive
Idaho Falls, ID 83401-1563

Dear Mr. Wessman:

RE: Closure Certification for the PREPP Incinerator and Waste Stabilization Units

This letter is regarding the January 28, 2000, "HWMA/RCRA Closure Certification of the Process Experimental Pilot Plant (PREPP) Incinerator and Waste Stabilization Units" at the Idaho National Engineering and Environmental Laboratory, EPA ID No. ID4890008952.

The Idaho Division of Environmental Quality has reviewed the certification and supporting documents and conducted an inspection of the PREPP Units. Based upon review of the required certification and unit inspection, DEQ hereby acknowledges completion of the activities specified in the approved PREPP Closure Plan.

This letter constitutes final administrative disposition of the PREPP Incinerator and Waste Stabilization Units operated at Test Area North. In accordance with IDAPA 16.01.05.012 [40 CFR §270.73(a)], interim status for these units is hereby terminated.

If you have any questions or comments, please contact Mr. Brian English at (208) 373-0425.

Sincerely,

Robert E. Bullock
Hazardous Waste Permit Coordinator
Waste Management & Remediation Programs Office

REB\BLE:ls \letters\2000\preppeer.ltr

cc: Jeff Hunt, EPA Region 10
Rensay Owen, IFRO
COF
Sue Evans, Bechtel BWXT
INpp

STATE OF IDAHO
DIVISION OF
ENVIRONMENTAL QUALITY

1410 North Hilton • Boise, Idaho 83706-1255 • (208) 373-0502

Dirk Kempthorne, Governor
C. Stephen Allred, Administrator

January 31, 2000

CERTIFIED MAIL # P 241 839 659
RETURN RECEIPT REQUESTED

Dave Wessman
DOE - Idaho Operations Office
850 Energy Drive
Idaho Falls, ID 83401-1563

Dear Mr. Wessman:

Re: Closure Certification (Certification) for the 1999 Hazardous Waste Management Act Closure Plan of the Heat Transfer Reactor Experiment (HTRE-3) at the Idaho National Engineering and Environmental Laboratory, EPA ID No. ID4890008952

The Idaho Division of Environmental Quality has reviewed the certification and supporting documents and conducted an inspection of the HTRE-3. Based upon review of the required certification and unit inspection, DEQ hereby acknowledges completion of the activities specified in the approved PWTU Closure Plan.

This letter constitutes final administrative disposition of the HTRE as operated at the EBR-1. In accordance with IDAPA 16.01.05.012 [40 CFR §270.73(a)], interim status for these units is hereby terminated.

If you have any questions or comments, please contact Dinah Little at 208/373-0426.

Sincerely,

Robert E. Bullock
Hazardous Waste Permit Coordinator
State Waste Management & Remediation Program Office

REB/DEL/jrm INEEL99\BECHML.LTR

cc: Jeff Hunt, EPA Region 10
INphc
Rensay Owen, IFRO
COF

STATE OF IDAHO
DIVISION OF
ENVIRONMENTAL QUALITY

1410 North Hilton • Boise, Idaho 83706-1255 • (208) 373-0502

Dirk Kempthorne, Governor
C. Stephen Allred, Administrator

November 2, 1999

CERTIFIED MAIL # P 241 839 649

Dave Wessman
DOE - Idaho Operations Office
850 Energy Drive
Idaho Falls, ID 83401-1563

Dear Mr. Wessman:

Re: June 1999 Closure Certification (Certification) for the 1997 Hazardous Waste Management Act Closure Plan of the Waste Calcine Facility (WCF) at the Idaho National Engineering and Environmental Laboratory, EPA ID No. ID4890008952

DEQ has reviewed the Certification and supporting documents and conducted an inspection of the WCF. Based upon this review and unit inspection, DEQ hereby acknowledges completion of the activities specified in the approved Closure Plan.

In accordance with Section 5 of the approved Closure Plan, the substantive post-closure care requirements of IDAPA 16.01.05.009 [40 CFR §265.310] for the WCF will be addressed under CERCLA as Applicable or Relevant and Appropriate Requirements (ARARs) under the Final Record of Decision and Post-Record of Decision Monitoring Plan for Operable Unit 3-13.

During the preparation of the Post-Record of Decision Monitoring Plan, DEQ requests DOE to preform quarterly monitoring to meet the substantive requirements of IDAPA 16.01.05.009 [40 CFR §265.310(b)]. The Monitoring Plan shall include the following:

- Maintain and monitor the effectiveness of the closure cap.
- Ensure proper run on and runoff of the cover cap.
- Protect and maintain surveyed benchmarks.
- Perform quarterly groundwater monitoring events or adequately describe how a current groundwater monitoring system will sufficiently monitor any contamination from the WCF.

The interim Inspection Schedule shall be submitted within 90 days of receipt of this letter, in accordance with IDAPA 16.01.05.009 [40 CFR §265.118].

If you have any questions or comments, please contact Dinah Little at 208/373-0426.

Sincerely,

Robert E. Bullock
Hazardous Waste Permit Coordinator
State Waste Management & Remediation Program Office

REB/DEL/ra INEEL99\WCFCERT.LTR

cc: Jeff Hunt, EPA Region 10
Rensay Owen, IFRO
INipwc
COF

STATE OF IDAHO
DIVISION OF
ENVIRONMENTAL QUALITY

1410 North Hilton • Boise, Idaho 83706-1255 • (208) 373-0502

Dirk Kempthorne, Governor
C. Stephen Allred, Administrator

July 20, 1999

David L. Wessman
DOE - Idaho Operations Office
850 Energy Drive
Idaho Falls, Idaho 83401-1563

Dear Mr. Wessman:

Re: Administrative Closure of the Multicurie Cell (MCC) at the Idaho Nuclear Technology Engineering Center (INTEC), Idaho National Engineering and Environmental Laboratory (INEEL), EPA ID No. ID4890008952

DEQ has reviewed your request and concurs with the justification and information provided in that the MCC has not, and will not, store or otherwise manage hazardous or mixed wastes. Therefore, in accordance with IDAPA 16.01.05.012 [40 CFR § 270.73 (a)], interim status for this unit is hereby terminated. As such, the next revision of the INEEL RCRA Part A permit application shall effect removal of the MCC from the Part A.

If you have any questions concerning this matter, please contact Vivien Hall at 208/373-0137.

Sincerely,

Brian R. Monson
Hazardous Waste Program Manager
State Waste Program Office

BRM:VH:sjt h:\paul_w\vivien\mcc-clar.wpd

cc: Jeff Hunt, EPA Region 10
Kathleen Trever, INEEL Oversight
Idaho Falls Regional Office
INppa4
COF

STATE OF IDAHO
DIVISION OF
ENVIRONMENTAL QUALITY

1410 North Hilton, Boise, ID 83706-1255, (208) 373-0502 Dirk Kempthorne, Governor

July 8, 1999

CERTIFIED MAIL # P 241 839 640

Dave Wessman
DOE - Idaho Operations Office
850 Energy Drive
Idaho Falls, ID 83401-1563

Dear Mr. Wessman:

Re: December 1998 Hazardous Waste Management Act Closure Plan for the Test Area North (TAN) and the Waste Reduction Operations Complex (WROC) Portable Water Treatment Units (PWTU) at the Idaho National Engineering and Environmental Laboratory, EPA ID No. ID4890008952

The DEQ has reviewed the certification and supporting documents and conducted an inspection of the WROC PWTU. Based upon review of the required certification and unit inspection, DEQ hereby acknowledges completion of the activities specified in the approved PWTU Closure Plan.

This letter constitutes final administrative disposition of the PWTU as operated at the TAN and WROC. In accordance with IDAPA 16.01.05.012 [40 CFR §270.73(a)], interim status for these units is hereby terminated.

If you have any questions or comments, please contact Dinah Little at 208/373-0426.

Sincerely,

Robert E. Bullock
Hazardous Waste Permit Coordinator
State Waste Program Office

REB/DEL/ra INEEL99\PWTUCERT.LTR

cc: Jeff Hunt, EPA Region 10
Sue Evans, LMITCO
Rensay Owen, IFRO
INppb
COF

STATE OF IDAHO
DIVISION OF
ENVIRONMENTAL QUALITY

1410 North Hilton, Boise, ID 83706-1255, (208) 373-0502

Dirk Kempthorne, Governor

April 16, 1999

CERTIFIED MAIL # P 241 839 628

Dave Wessman
DOE - Idaho Operations Office
850 Energy Drive
Idaho Falls, ID 83401-1563

Dear Mr. Wessman:

This letter is regarding the July 1998 Hazardous Waste Management Act Closure Plan (Plan) for the Certified and Segregated Building (C&S) and Air Support Building-II (ASB-II) at the Idaho National Engineering and Environmental Laboratory, EPA ID No. ID4890008952.

The DEQ, Air and Hazardous Waste, Hazardous Waste Permitting Bureau (HWPB) has reviewed the certification and supporting documents, and conducted an inspection of the C&S building and ASB-II. Based upon review of the required certification and results of the unit inspection, the HWPB hereby acknowledges completion of the activities specified in the approved C&S and ASB-II Closure Plan.

This letter constitutes final administrative disposition of the C&S and ASB-II. In accordance with IDAPA 16.01.05.012 [40 CFR §270.73(a)], interim status for these units is hereby terminated.

If you have any questions or comments, please contact Dinah Little of my staff at 208/373-0426.

Sincerely,

Robert E. Bullock, Manager
Hazardous Waste Permitting Bureau
Air and Hazardous Waste Division

REB/DEL/ra INEEL99\C&SCERT.LTR

cc: Jeff Hunt, EPA Region 10
Cheryl Koshuta, LMITCO
Jim Johnston/Rensay Owen, IFRO
INprc
COF

IDAHO DEPARTMENT
OF HEALTH AND WELFARE

DIVISION OF
ENVIRONMENTAL QUALITY

1410 North Hilton, Boise, ID 83706-1255, (208) 334-0502

December 2, 1997

CERTIFIED MAIL # P 070 696 401

Donald N. Rasch
DOE - Idaho Operations Office
850 Energy Drive
Idaho Falls, ID 83401-1563

Dear Mr. Rasch:

This letter is in response to the supporting documentation received August 18, 1997, and additionally requested information dated October 16, 1997, for certification of closure of the Waste Experimental Development Facility treatment and storage units on the Idaho National Engineering and Environmental Laboratory (INEEL), EPA ID No. ID4890008952.

The DEQ, Air and Hazardous Waste Division, Hazardous Waste Permitting Bureau (HWPB) has reviewed the documentation provided. Based on this review, and an inspection conducted by the HWPB, the WEDF hazardous waste management units appear to have been closed in accordance with the specifications in the approved closure plan.

This letter further acknowledges final administrative disposition of the WEDF hazardous waste stabilization and storage units from the INEEL Interim Status Document/Part A Permit. Therefore, in accordance with IDAPA 16.01.05.012 [40 CFR § 270.73(a)], interim status for these units is hereby terminated.

If you have any questions or comments, please contact Robert Bullock at (208) 373-0502.

Sincerely,

Brian R. Monson

Brian Monson, Chief
Hazardous Waste Permitting Bureau

BRM/REB/ra INEEL97\WEDFCRT.LTR

cc: Linda Meyer, EPA Region 10
Kathleen Trever, INEEL Oversight
Idaho Falls Regional Office

INpw
INppa
COF

IDAHO DEPARTMENT
OF HEALTH AND WELFARE

DIVISION OF
ENVIRONMENTAL QUALITY

1410 North Hilton, Boise, ID 83706-1255, (208) 334-0502

Philip E. Batt, Governor

September 24, 1997

CERTIFIED MAIL # P 326 991 394

Donald N. Rasch
DOE - Idaho Operations Office
850 Energy Drive
Idaho Falls, ID 83401-1563

Dear Mr. Rasch:

This letter is in response to the supporting documentation received July 29, 1997, for closure certification of the Specific Manufacturing Capability (SMC) Waste Acid Calciner units on the Idaho National Engineering and Environmental Laboratory (INEEL), EPA ID No. ID4890008952.

The DEQ, Air and Hazardous Waste Division, Hazardous Waste Permitting Bureau (HWPB) has reviewed the documentation provided. Based on this review, and a subsequent inspection conducted by the HWPB, the SMC Waste Acid Calciner units appear to have been closed in accordance with the specifications in the approved closure plan.

This letter further acknowledges final administrative desposition of the SMC Waste Acid Calciner units from the INEEL Interim Status Document/Part A Permit. Therefore, in accordance with IDAPA 16.01.05.012 [40 CFR § 270.73(a)], interim status for these units is hereby terminated.

If you have any questions or comments, please contact Robert Bullock at (208) 373-0502.

Sincerely,

Brian R. Monson

Brian Monson, Chief
Hazardous Waste Permitting Bureau
Air and Hazardous Waste Division

BRM/REB/ra INEEL97SMCCRTLTR

cc: Linda Meyer, EPA Region 10
Jay Mitchell, LMITCO
Kathleen Trever, INEEL Oversight
Idaho Falls Regional Office

INpsmc
INppa
COF

Printed on Recycled Paper

IDAHO DEPARTMENT
OF HEALTH AND WELFARE

DIVISION OF
ENVIRONMENTAL QUALITY

1410 North Hilton, Boise, ID 83706-1255, (208) 334-0502

June 13, 1997

CERTIFIED MAIL # P 326 991 365
RETURN RECEIPT REQUESTED

Donald N. Rasch
DOE - Idaho Operations Office
850 Energy Drive
Idaho Falls, ID 83401-1563

Dear Mr. Rasch:

This letter is written in response to the April 21, 1997, Closure Certification for Test Area North 647 Sodium Storage Unit (TAN 647) at the Idaho National Engineering and Environmental Laboratory (INEEL), EPA ID No. ID4890008952.

The DEQ, Air and Hazardous Waste Division, Hazardous Waste Permitting Bureau has reviewed the certification and determined that TAN-647 has been closed in accordance with the specifications of the approved closure plan.

Therefore, this letter shall constitute final administrative disposition of TAN 647 from the INEEL Interim Status Document/Part A permit and, in accordance with IDAPA 16.01.05.012 [40 CFR § 270.73(a)], interim status for this unit is hereby terminated.

If you have any questions or comments, please contact Bob Bullock at (208) 373-0502.

Sincerely,

Brian R. Monson, Chief
Hazardous Waste Permitting Bureau
Air & Hazardous Waste

BRM/REB/ra INEEL97\TAN647CE.LTR

cc: Linda Meyer, EPA Region 10
Jay Mitchell, LMITCO
Kathleen Trever, INEEL Oversight
Idaho Falls Regional Office
Dave Pisarski, CAB
INptac
COF

CAPC DEPARTMENT
OF HEALTH AND WELFARE
DIVISION OF
ENVIRONMENTAL QUALITY

1410 North Hilton, Boise, ID 83706-1255, (208) 334-0502

February 25, 1997

CERTIFIED MAIL # P 070 696 637
RETURN RECEIPT REQUESTED

Donald N. Rasch
DOE - Idaho Operations Office
850 Energy Drive
Idaho Falls, ID 83401-1563

Dear Mr. Rasch:

This letter is being sent in response to the Department of Energy's submittal of "*Reports and Summaries of Reports Describing the Federal Facility Agreement/Consent Order (FFA/CO) Actions Taken to Remove Hazardous Waste Residues from the Naval Ordinance Disposal Area at the Idaho National Engineering Laboratory*" (Reports).

The DEQ, Air and Hazardous Waste Division, Hazardous Waste Permitting Bureau (HWPB) has reviewed the Reports received December 9, 1996. Based upon the information contained in the submittal and a recent HWPB site visit/inspection, the HWPB has determined that it appears all hazardous wastes and hazardous waste residues have been removed. Therefore, in accordance with the HWPB's letter dated November 5, 1996, requesting the Reports, the HWPB hereby terminates Interim Status for the NODA, EPA ID No. ID4890008952.

It is the understanding of the HWPB that the CERCLA program shall perform the final evaluation of the site in accordance with the FFA/CO and shall include any requisite ARAR and HWMA reviews prior to issuance of the final Record of Decision.

This letter constitutes administrative disposition of the NODA from the Volume I, Part A, Interim Status Document for the INEEL.

If you have any questions, please contact Robert Bullock at (208) 373-0502.

Sincerely,

Brian R. Monson, Chief
Hazardous Waste Permitting Bureau

BRM/REB/ra N:\EELS\NNODADSP.LTR

cc: Linda Meyer, EPA Region 10
Jim Johnston/Rensay Owen, IFRO
Shawn Rosenberger, IFRO
Jay Mitchell, LMITCO
Dave Wessman, DOE
Kathleen Trever, INEEL Oversight
Dean Nygard, Remediation Bureau
Chris Werner, HWPB
INon
INppa
COF

IDAHO DEPARTMENT
OF HEALTH AND WELFARE

DIVISION OF
ENVIRONMENTAL QUALITY

1410 North Hilton, Boise, ID 83706-1255, (208) 334-0502

Philip E. Batt, Governor

February 25, 1997

CERTIFIED MAIL # P 070 696 636
RETURN RECEIPT REQUESTED

Donald N. Rasch
DOE - Idaho Operations Office
850 Energy Drive
Idaho Falls, ID 83401-1563

Dear Mr. Rasch:

This letter is regarding the HWMA/RCRA Certification of Closure, received January 21, 1997, for the Test Area North 607A Evaporator Unit (TAN 607A) at the Idaho National Environmental Engineering Laboratory, EPA ID No. ID4890008952.

The DEQ, Air and Hazardous Waste Division, Hazardous Waste Permitting Bureau (HWPB) has reviewed the Certification and supporting documents and conducted an inspection of TAN 607A. Based upon review of the required certification and the results of the unit inspection, the HWPB hereby acknowledges completion of the activities specified in the approved TAN 607A Closure Plan.

This letter constitutes final administrative disposition of TAN-607A. In accordance with IDAPA 16.01.05.012 [40 CFR § 270.73(a)], interim status for this unit is hereby terminated. This unit shall be deleted from the Part A upon the next revision of the same.

If you have any questions or comments, please contact Bob Bullock at (208) 373-0502.

Sincerely,

Brian R. Monson, Chief
Hazardous Waste Permitting Bureau
Air and Hazardous Waste Division

BRM/REB/ra INEEL97607ACERT.LTR

cc: Dawnee McCulley, EPA Region 10
Idaho Falls Regional Office
Jay Mitchell, LMITCO
Dave Wessman, DOE
Kathleen Trever, INEEL Oversight
INptanc
COF

IDAHO DEPARTMENT
OF HEALTH AND WELFARE

DIVISION OF
ENVIRONMENTAL QUALITY

1410 North Hilton, Boise, ID 83706-1255, (208) 334-0502

Philip E. Batt, Governor

December 20, 1996

CERTIFIED MAIL # P 070 696 627
RETURN RECEIPT REQUESTED

Donald N. Rasch
DOE - Idaho Operations Office
850 Energy Drive
Idaho Falls, ID 83401-1563

Dear Mr. Rasch:

This letter is regarding closure of the Initial Engine Test Mercury Storage Pad (IET Hg Storage) and the Specific Manufacturing Capability (SMC) Test Area North - 681 (TAN-681) Evaporator Units at the Idaho National Engineering Laboratory, EPA No. ID4890008952.

Acting under the authority of the Hazardous Waste Management Act of 1983, as amended, the DEQ Air and Hazardous Waste Division, Hazardous Waste Permitting Bureau (HWPB) has conducted inspections of these units. Based upon the results of these inspections, the HWPB hereby acknowledges completion of the activities specified in the approved IET Hg Storage Unit Closure Plan and the approved TAN-681 Evaporator Units Closure Plan.

This letter constitutes final administrative disposition of the IET Hg Storage Unit and the TAN-681 Evaporator Units. Therefore, in accordance with IDAPA 16.01.05.012 [40 CFR § 270.73(a)], interim status for these units is hereby terminated. As such, the next revision of the INEL Site-wide Part A shall effect removal of the IET Hg Storage Unit and the TAN-681 Evaporator Units from the Part A.

If you have any questions or comments, please contact Bob Bullock at (208) 373-0502.

Sincerely,

Wallace N. Cory, P.E.
Administrator

WNC/rla INEL96IETTAN681.LTR

cc: Dawnee McCulley, EPA Region 10
Idaho Falls Regional Office
Robert Ferguson, INEL Oversight
[illegible]

INpsmdc
INpic
COF

IDAHO DEPARTMENT
OF HEALTH AND WELFARE

DIVISION OF
ENVIRONMENTAL QUALITY

1410 North Hilton, Boise, ID 83706-1255, (208) 334-0502

September 12, 1996

Donald N. Rasch
DOE - Idaho Operations Office
850 Energy Drive
Idaho Falls, ID 83401-1563

Dear Mr. Rasch:

The purpose of this letter is to acknowledge that the ARVFS NaK Storage Unit has been closed, according to the specifications in the approved closure plan, at the Idaho National Engineering Laboratory (INEL), EPA ID No. ID4890008952.

This action constitutes final administrative disposition of the ARVFS NaK Storage Unit from the INEL Interim Status Document/Part A permit. Therefore, in accordance with IDAPA 16.01.05.012 [40 CFR § 270.73(a)], interim status for this unit is hereby terminated.

If you have any questions or comments, please contact Bob Bullock at (208) 272-0502.

Sincerely,

Brian R. Monson, Chief
Hazardous Waste Permitting Bureau
Air & Hazardous Waste Division

BRM/REB/ra INEL\1996\ARVSCLSD.LTR

cc: Dawnee McCulley, EPA Region 10
Robert Ferguson, INEL Oversight
Jay Mitchell, LITCO
INparv
INppa
EIRO
COF

IDAHO DEPARTMENT
OF HEALTH AND WELFARE

DIVISION OF
ENVIRONMENTAL QUALITY

1410 North Hilton, Boise, ID 83706-1255, (208) 334-0502

May 13, 1996

CERTIFIED MAIL # P 875 704 485
RETURN RECEIPT REQUESTED

Donald N. Rasch
DOE - Idaho Operations Office
850 Energy Drive
Idaho Falls, ID 83401-1563

Dear Mr. Rasch:

This letter is concerning the RCRA Certification Closure Report received on April 1, 1996, for closure of the Fluorinel Dissolution Process (FDP) Waste Tanks VES-FA-141 and VES-FA-142 located at the Idaho National Engineering Laboratory (INEL), EPA No. ID4890008952.

Acting under the authority of the Hazardous Waste Management Act of 1983, as amended, the DEQ, Permits and Enforcement, Operating Permits Bureau (OPB) hereby acknowledges that FDP Waste Tanks VES-FA-141 and VES-FA-142 have been closed according to the requirements of the approved closure plan.

This action constitutes final administrative disposition of the FDP Waste Tanks VES-FA-141 and VES-FA-142, regarding the INEL Part A. Therefore, according to IDAPA 16.01.05.012 [40 CFR § 270.73(a)], interim status for these units is hereby terminated and these units shall be removed from the Part A.

If you have any questions or comments concerning this matter, contact Mark Jeffers at (208) 373-0502.

Sincerely,

Brian R. Monson, Chief
Operating Permits Bureau
Permits and Enforcement

BRM/MJ/ra INEL\1996\FDPAPRVD.LTR

cc: Dawnee McCulley, EPA Region 10
Jay Mitchell, LITCO
Robert Ferguson, INEL Oversight
Jim Johnston/Rensay Owen, EIRO
Dave Pisarski, EB
Mark Jeffers, OPB
INptc
Inppa2
COF

IDAHO DEPARTMENT
OF HEALTH AND WELFARE

DIVISION OF
ENVIRONMENTAL QUALITY

1410 North Hilton, Boise, ID 83706-1255, (208) 334-0502

December 26, 1995

CERTIFIED MAIL # P 875 704
RETURN RECEIPT REQUESTED

Donald N. Rasch
DOE - Idaho Operations Office
850 Energy Drive
Idaho Falls, ID 83401-1563

Dear Mr. Rasch:

This letter is in reference to the RCRA Certification of Closure, received on October 6, 1995, for the Test Area North (TAN) 726 Chromate Water Storage Unit and the TAN 726A Treatment Unit located at the Idaho National Engineering Laboratory (INEL), EPA No. ID4890008952.

Acting under the authority of the Hazardous Waste Management Act of 1983, as amended, the DEQ, Permits and Enforcement, Operating Permits Bureau (OPB), hereby acknowledges that the TAN 726 Chromate Water Storage Unit and the TAN 726A Treatment Unit have been closed in accordance with the specifications in the approved closure plan.

This action constitutes final administrative disposition of the TAN 726 Chromate Water Storage Unit and the TAN 726A Treatment Unit regarding the INEL Part A Permit. Therefore, in accordance with IDAPA 16.01.05.012 [40 CFR § 270.73(a)], interim status for each of these two (2) units is hereby terminated.

If you have any questions or comments, please contact Ken Hanna at (208) 373-0502.

Sincerely,

Randall W. Stett for

Brian R. Monson, Chief
Operating Permits Bureau
Permits and Enforcement

BRM/KLH/rj INEL\1995\CRTAPRV2.LTR

cc: Dawnee McCulley, EPA Region 10
Jay Mitchell, LITCO
Robert Ferguson, INEL Oversight
Jim Johnston/Rensay Owen, EIRO
Dave Pisarski, EB
INptc
INppa2
COF

IDAHO DEPARTMENT
OF HEALTH AND WELFARE

DIVISION OF
ENVIRONMENTAL QUALITY

1410 North Hilton, Boise, ID 83706-1255, (208) 334-0502

November 29, 1995

Donald N. Rasch
Senior Environmental Engineer
Sitewide Programs
Department of Energy
Idaho Operations Office
850 Energy Drive
Idaho Falls, Idaho 83401-1563

Dear Mr. Rasch:

The Idaho Division of Environmental Quality (IDEQ) has received and reviewed the RCRA Clean-Closure Certifications for the ICPP-Percolation Pond #1 (OPE\ES-94-165), dated June 1, 1994, and for Percolation Pond #2 (OPE-SP-95-239), dated April 21, 1995. The closure requirements for both Percolation Ponds #1 and #2 are pursuant to the October 7, 1992 and October 6, 1995 Consent Orders.

After review of the RCRA Clean-Closure Certifications for the ICPP-Percolation Ponds #1 and #2, it appears that DOE has complied with all terms and conditions of the approved Closure Plan for the Percolation Ponds. IDEQ confirms the ICPP-Percolation Ponds #1 and #2 are now "clean closed" under the Federal Resource Conservation and Recovery Act (RCRA)/Idaho Hazardous Waste Management Act (HWMA).

IDEQ thanks you for your cooperation in this matter. If you have any questions, please contact D. Michael Gregory of my staff at (208) 373-0502.

Sincerely,

Orville D. Green

Orville D. Green
Assistant Administrator
Permits and Enforcement
Idaho Division of Environmental Quality

ODG:tg c:\...\mike\inel\ppond.clo

cc: J. Johnston, EIRO
B. Monson, IDEQ-OPB
D. Pisarski, IDEQ-EB
INipc

IDAHO DEPARTMENT
OF HEALTH AND WELFARE

DIVISION OF
ENVIRONMENTAL QUALITY

1410 North Hilton, Boise, ID 83706-1255, (208) 334-0502

Philip E. Batt, Governor

October 27, 1995

CERTIFIED MAIL # P 875 704 199
RETURN RECEIPT REQUESTED

Donald N. Rasch
DOE - Idaho Operations Office
850 Energy Drive
Idaho Falls, ID 83401-1563

Dear Mr. Rasch:

This letter is in reference to the RCRA Certification of Closure, received on October 6, 1995, for the Test Reactor Area (TRA) 610 Lead Storage Unit located at the Idaho National Engineering Laboratory (INEL), EPA ID No. ID4890008952.

Acting under the authority of the Hazardous Waste Management Act of 1983, as amended, the DEQ, Permits and Enforcement, Operating Permits Bureau, hereby acknowledges that the TRA 610 Lead Storage Unit has been closed in accordance with the specifications in the approved closure plan.

This action constitutes final administrative disposition of the TRA 610 Lead Storage Unit from the INEL Part A permit. Therefore, in accordance with IDAPA 16.01.05.012 [40 CFR § 270.73(a)], interim status for this unit is hereby terminated.

If you have any questions or comments, please contact Bob Bullock at (208) 373-0502.

Sincerely,

Brian R. Monson, Chief
Operating Permits Bureau
Permits and Enforcement

BRM/REB/rj c:\...\INEL\TRA\CERTAPRV.LTR

cc: Dawnee McCulley, EPA Region 10
Robert Ferguson, INEL Oversight
INptrc
EIRO
COF

RCRA SUBTITLE C
SITE IDENTIFICATION
FORM

United States Environmental Protection Agency
RCRA SUBTITLE C SITE IDENTIFICATION FORM

1. Reason for Submittal (Select only one.)

☐	Obtaining or updating an EPA ID number for on-going regulated activities (Items 10-17 below) that will continue for a period of time.
☐	Submitting as a component of the Hazardous Waste Report for _____ (Reporting Year)
	☐ Site was a TSD facility, a reverse distributor, and/or generator of ≥ 1,000 kg of non-acute hazardous waste, > 1 kg of acute hazardous waste, or > 100 kg of acute hazardous waste spill cleanup in **one or more months of the reporting year** (or State equivalent LQG regulations)
☐	Notifying that regulated activity is no longer occurring at this Site
☐	Obtaining or updating an EPA ID number for conducting Electronic Manifest Broker activities
☑	Submitting a new or revised Part A (permit) Form **ANNUAL UPDATE FOR THE VOLUME 1 PERMIT APPLICATION**

2. Site EPA ID Number

I	D	4	8	9	0	0	0	8	9	5	2

3. Site Name

IDAHO NATIONAL LABORATORY

4. Site Location Address

Street Address		
City, Town, or Village **SCOVILLE**		County BUTTE, CLARK, JEFFERSON, BONNEVILLE, BINGHAM
State **IDAHO**	Country **USA**	Zip Code **83415**
Latitude **43.536237**	Longitude **-112.945169**	☐ Use Lat/Long as Primary Address

5. Site Mailing Address ☐ Same as Location Street Address

Street Address **1955 FREMONT AVENUE**		
City, Town, or Village **IDAHO FALLS**		
State **IDAHO**	Country **USA**	Zip Code **83415**

6. Site Land Type

☐ Private ☐ County ☐ District ☑ Federal ☐ Tribal ☐ Municipal ☐ State ☐ Other

7. North American Industry Classification System (NAICS) Code(s) for the Site (at least 5-digit codes)

A. (Primary)	**92411**	C.	**336992**
B.	**54171**	D.	

8. Site Contact Person

Enter the primary site contact here and additional contacts in Appendix A.

First Name **SHELBY**	MI **L**	Last Name **GOODWIN**
Title **ENVIRONMENTAL LEAD**		
Email **GOODWISL@ID.DOE.GOV**		
Phone **208-541-0078**	Ext **N/A**	Fax **208-526-5678**
Preferred Language **ENGLISH**		

A. Site Contact Address ☐ Same as Location Address

Street Address **1955 FREMONT AVENUE**		
City, Town, or Village **IDAHO FALLS**		
State **IDAHO**	Country **USA**	Zip Code **83415**

9. Legal Owner and Operator of the Site

A. Name of Site's Legal Owner ☐ Same as Location Address

Full Name **US DEPT OF ENERGY, IDAHO OPERATIONS OFFICE**	Date Became Owner (mm/dd/yyyy) **01/01/1952**

Owner Type

☐ Private ☐ County ☐ District ☑ Federal ☐ Tribal ☐ Municipal ☐ State ☐ Other

Street Address **1955 FREMONT AVENUE**		
City, Town, or Village **IDAHO FALLS**		
State **IDAHO**	Country **USA**	Zip Code **83415**
Email **BOSTONRD@ID.DOE.GOV**		
Phone **208-526-7300**	Ext **N/A**	Fax **208-526-5678**
Comments **N/A**		

B. Name of Site's Legal Operator ☐ Same as Location Address

Full Name **IDAHO ENVIRONMENTAL COALITION, LLC**	Date Became Operator (mm/dd/yyyy) **01/01/2022**

Operator Type

☑ Private ☐ County ☐ District ☐ Federal ☐ Tribal ☐ Municipal ☐ State ☐ Other

Street Address **1580 SAWTELLE ST**		
City, Town, or Village **IDAHO FALLS**		
State **IDAHO**	Country **USA**	Zip Code **83402**
Email **DANIEL.COYNE@ICP.DOE.GOV**		
Phone **208-533-0050**	Ext **N/A**	Fax **208-533-0202**
Comments **N/A**		

10. Type of Regulated Waste Activity (at your site)

Mark "Yes" or "No" for all current activities (as of the date submitting the form); complete any additional boxes as instructed.

A. Hazardous Waste Activities

☑ Y ☐ N	1. Generator of Hazardous Waste—If "Yes", mark only one of the following—a, b, c	
☑	a. LQG	-Generates, in any calendar month, 1,000 kg/mo (2,200 lb/mo) or more of non-acute hazardous waste (includes quantities imported by importer site); or - Generates, in any calendar month, or accumulates at any time, more than 1 kg/mo (2.2 lb/mo) of acute hazardous waste; or - Generates, in any calendar month or accumulates at any time, more than 100 kg/mo (220 lb/mo) of acute hazardous spill cleanup material.
☐	b. SQG	100 to 1,000 kg/mo (220-2,200 lb/mo) of non-acute hazardous waste and no more than 1 kg (2.2 lb) of acute hazardous waste and no more than 100 kg (220 lb) of any acute hazardous spill cleanup material.
☐	c. VSQG	Less than or equal to 100 kg/mo (220 lb/mo) of non-acute hazardous waste.
☑ Y ☐ N	Is State Generator of Hazardous Waste the same as Federal— If "No", indicate State Generator Category in the space provided.	
☐ Y ☑ N	2. Short-Term Generator (generates from a short-term or one-time event and not from on-going processes). If "Yes", provide an explanation in the Comments section. *Note: If "Yes", you MUST indicate that you are a Generator of Hazardous Waste in Item 10.A.1 above.*	
☑ Y ☐ N	3. Treater, Storer or Disposer of Hazardous Waste—Note: Part B of a hazardous waste permit is required for these activities.	
☑ Y ☐ N	4. Receives Hazardous Waste from Off-site	
☐ Y ☑ N	5 Recycler of Hazardous Waste	
☐	a. Recycler who stores prior to recycling	
☐	b. Recycler who does not store prior to recycling	
☐ Y ☑ N	6. Exempt Boiler and/or Industrial Furnace—If "Yes", mark all that apply.	
☐	a. Small Quantity On-site Burner Exemption	
☐	b. Smelting, Melting, and Refining Furnace Exemption	

B. Waste Codes for Federally Regulated Hazardous Wastes. Please list the waste codes of the Federal hazardous wastes handled at your site. List them in the order they are presented in the regulations (e.g. D001, D003, F007, U112). Use an additional page if more spaces are needed.

SEE ITEM 18. COMMENTS (PAGE 6 OF 6)				

C. Waste Codes for State Regulated (non-Federal) Hazardous Wastes. Please list the waste codes of the State hazardous wastes handled at your site. List them in the order they are presented in the regulations. Use an additional page if more spaces are needed.

SEE ITEM 18. COMMENTS (PAGE 6 OF 6)				

11. Additional Regulated Waste Activities (NOTE: Refer to your State regulations to determine if a separate permit is required.)

A. Other Waste Activities

☑ Y ☐ N	1. Transporter of Hazardous Waste—If "Yes", mark all that apply.
☑	a. Transporter
☐	b. Transfer Facility (at your site)
☐ Y ☑ N	2. Underground Injection Control
☐ Y ☑ N	3. United States Importer of Hazardous Waste
☐ Y ☑ N	4. Recognized Trader—If "Yes", mark all that apply.
☐	a. Importer
☐	b. Exporter
☐ Y ☑ N	5. Importer/Exporter of Spent Lead-Acid Batteries (SLABs) under 40 CFR 266 Subpart G—If "Yes", mark all that apply.
☐	a. Importer
☐	b. Exporter

B. Universal Waste Activities

☑ Y ☐ N	1. Large Quantity Handler of Universal Waste (you accumulate 5,000 kg or more) - If "Yes" mark all that apply. Note: Refer to your State regulations to determine what is regulated.
☑	a. Batteries
☑	b. Pesticides
☑	c. Mercury containing equipment
☑	d. Lamps
☑	e. Aerosol Cans
☐	f. Other (specify) _____
☐	g. Other (specify) _____
☐ Y ☑ N	2. Destination Facility for Universal Waste Note: A hazardous waste permit may be required for this activity.

C. Used Oil Activities

☐ Y ☑ N	1. Used Oil Transporter—If "Yes", mark all that apply.
☐	a. Transporter
☐	b. Transfer Facility (at your site)
☐ Y ☑ N	2. Used Oil Processor and/or Re-refiner—If "Yes", mark all that apply.
☐	a. Processor
☐	b. Re-refiner
☐ Y ☑ N	3. Off-Specification Used Oil Burner
☐ Y ☑ N	4. Used Oil Fuel Marketer—If "Yes", mark all that apply.
☐	a. Marketer Who Directs Shipment of Off-Specification Used Oil to Off-Specification Used Oil Burner
☐	b. Marketer Who First Claims the Used Oil Meets the Specifications

D. Pharmaceutical Activities

☑ Y ☐ N	1. Operating under 40 CFR Part 266, Subpart P for the management of hazardous waste pharmaceuticals—if "Yes", mark only one. Note: See the item-by-item instructions for definitions of healthcare facility and reverse distributor.
☑	a. Healthcare Facility
☐	b. Reverse Distributor
☐ Y ☑ N	2. Withdrawing from operating under 40 CFR Part 266, Subpart P for the management of hazardous waste pharmaceuticals. Note: You may only withdraw if you are a healthcare facility that is a VSQG for all of your hazardous waste, including hazardous waste pharmaceuticals.

12. Eligible Academic Entities with Laboratories—Notification for opting into or withdrawing from managing laboratory hazardous wastes pursuant to 40 CFR Part 262, Subpart K.

☐ Y ☑ N	A. Opting into or currently operating under 40 CFR Part 262, Subpart K for the management of hazardous wastes in laboratories— If "Yes", mark all that apply. Note: See the item-by-item instructions for definitions of types of eligible academic entities.
☐	1. College or University
☐	2. Teaching Hospital that is owned by or has a formal written affiliation with a college or university
☐	3. Non-profit Institute that is owned by or has a formal written affiliation with a college or university
☐ Y ☑ N	B. Withdrawing from 40 CFR Part 262, Subpart K for the management of hazardous wastes in laboratories.

13. Episodic Generation

☐ Y ☑ N	Are you an SQG or VSQG generating hazardous waste from a planned or unplanned episodic event, lasting no more than 60 days, that moves you to a higher generator category. If "Yes", you must fill out the Addendum for Episodic Generator.

14. LQG Consolidation of VSQG Hazardous Waste

☐ Y ☑ N	Are you an LQG notifying of consolidating VSQG Hazardous Waste Under the Control of the Same Person pursuant to 40 CFR 262.17(f)? If "Yes", you must fill out the Addendum for LQG Consolidation of VSQG hazardous waste.

15. Notification of LQG Site Closure for a Central Accumulation Area (CAA) (optional) OR Entire Facility (required)

☐ Y ☑ N	LQG Site Closure of a Central Accumulation Area (CAA) or Entire Facility.
	A. ☐ Central Accumulation Area (CAA) or ☐ Entire Facility
	B. Expected closure date: _____ mm/dd/yyyy
	C. Requesting new closure date: _____ mm/dd/yyyy
	D. Date closed : _____ mm/dd/yyyy ☐ 1. In compliance with the closure performance standards 40 CFR 262.17(a)(8) ☐ 2. Not in compliance with the closure performance standards 40 CFR 262.17(a)(8)

16. Notification of Hazardous Secondary Material (HSM) Activity

☐ Y ☑ N	Are you notifying under 40 CFR 260.42 that you will begin managing, are managing, or will stop managing hazardous secondary material under 40 CFR 260.30, 40 CFR 261.4(a)(23), (24), (25), or (27)? If "Yes", you must fill out the Addendum to the Site Identification Form for Managing Hazardous Secondary Material.

17. Electronic Manifest Broker

☐ Y ☑ N	Are you notifying as a person, as defined in 40 CFR 260.10, electing to use the EPA electronic manifest system to obtain, complete, and transmit an electronic manifest under a contractual relationship with a hazardous waste generator?

18. Comments (include item number for each comment)

ITEM 10.B. See Item 7 of the Hazardous Waste Permit Part A Form
ITEM 10.C. See Item 7 of the Hazardous Waste Permit Part A Form

19. Certification I certify under penalty of law that this document and all attachments were prepared under my direction or supervision in accordance with a system designed to assure that qualified personnel properly gather and evaluate the information submitted. Based on my inquiry of the person or persons who manage the system, or those persons directly responsible for gathering the information, the information submitted is, to the best of my knowledge and belief, true, accurate, and complete. I am aware that there are significant penalties for submitting false information, including the possibility of fines and imprisonment for knowing violations. **Note: For the RCRA Hazardous Waste Part A permit Application, all owners and operators must sign (see 40 CFR 270.10(b) and 270.11).**

Signature of legal owner, operator or authorized representative	Date (mm/dd/yyyy)
	03/03/2026
Printed Name (First, Middle Initial Last) DANIEL W. COYNE	Title PROGRAM MANAGER, IEC, LLC
Email DANIEL.COYNE@ICP.DOE.GOV	

Signature of legal owner, operator or authorized representative	Date (mm/dd/yyyy)
	3/18/2026
Printed Name (First, Middle Initial Last) ROBERT BOSTON	Title MANAGER, DOE, IDAHO OPS OFFICE
Email BOSTONRD@ID.DOE.GOV	

HAZARDOUS WASTE
PERMIT PART A FORM

ITEMS 1-11 GENERAL
SITE INFORMATION

EPA ID Number	I	D	4	8	9	0	0	0	8	9	5	2

OMB# 2050-0024; Expires 08/31/2028

United States Environmental Protection Agency

HAZARDOUS WASTE PERMIT PART A FORM

1. Facility Permit Contact

First Name	**SHELBY**	MI	**L**	Last Name	**GOODWIN**
Title	**ENVIRONMENTAL LEAD**				
Email	**GOODWISL@ID.DOE.GOV**				
Phone	**208-541-0078**	Ext	**N/A**	Fax	**208-526-5678**

2. Facility Permit Contact Mailing Address

Street Address	**1955 FREMONT AVENUE**	
City, Town, or Village	**IDAHO FALLS**	
State **IDAHO**	Country **USA**	Zip Code **83415**

3. Facility Existence Date (mm/dd/yyyy)

1/1/1949

4. Other Environmental Permits

A. Permit Type	B. Permit Number	C. Description
R	**IDA4890008952**	**MFC (PER-116)**
R	**IDA4890008952**	**INTEC LWMS (PER-111)**
R	**IDA4890008952**	**INTEC WASTE MANAGMENT (PER-109)**
R	**IDA4890008952**	**INTEC CALCINE (PER-114)**
R	**IDA4890008952**	**INTEC POST CLOSURE (PER-112)**
		SEE PAGE 1A OF 2 FOR ADDITIONAL
		INFO SUPPLEMENT TO ITEM 4

5. Nature of Business

The Idaho National Laboratory was established in 1949 as a center where nuclear power reactors and support facilities could be built, tested, and operated. The INL site covers approximately 890 square miles and is 25 miles west of Idaho Falls, ID. For many years, the INL was the site of the largest nuclear power research and development effort in the world. During the 1970's the INL's mission broadened to include such areas a biotechnology, energy and materials research, and conservation and renewable energy. At the end of the Cold War, waste treatment and cleanup of previously contaminated sites became a priority. Today the INL is a science-based, applied engineering national laboratory dedicated to completing its waste cleanup mission and meeting the nation's environmental, energy, nuclear science and technology, and national security needs. Additionally, in 2002, it was announced that the INL will serve as the nation's leading nuclear technology center.

Supplement to Item 4. Other Environmental Permits List

STATE OF IDAHO HAZARDOUS WASTE MANAGEMENT PERMIT

(Permit Type R)

- Advanced Mixed Waste Treatment Project (AMWTP) HWMA/RCRA Partial Permit (PER-153)
- HWMA/RCRA Part A Permit Application for the INL – INTEC (Volume 1, PER-101)
- HWMA/RCRA Part B Permit Application for the INL – General Information for INL Waste Management Units (Volume 3, PER-102)

STATE OF IDAHO AIR PERMITS

PTC (Permit Number P-2020.0045)

- INL Sitewide Permit to Construct Facility and Emissions Cap

WATER PERMITS

State of Idaho Monitoring Well Permit (IDWR)

(Permit Type U)

- INL monitoring well permit applications are sent annually to the IDWR for wells (greater than 18 feet deep) to be constructed in the current calendar year. Permits are authorized by agreement between the DOE-ID and the IDWR.

State of Idaho Wastewater Permits (WRP)

(Permit Type E)

- Idaho National Laboratory Idaho Nuclear Technology and Engineering Center (INTEC) New Percolation Ponds, Reuse Permit M-130-06
- INL Material and Fuels Complex (MFC) Industrial Waste Pond, Reuse Permit I-160-02
- INL Advanced Test Reactor (ATR) Complex Cold Waste Ponds, Reuse Permit I-161-03

Water Rights

(Permit Type E)

- INL operations use groundwater guaranteed by a Water Right between the State of Idaho and the United States Department of Energy.

6. Process Codes and Design Capacities

Line Number		A. Process Code			B. PROCESS DESIGN CAPACITY (1) Amount	B. PROCESS DESIGN CAPACITY (2) Unit of Measure	C. Process Total Number of Units	D. Unit Name
0	1	S	0	2	1,200,000	G	001	See pages 2a through 2g of 2, Supplements to Item 6. Process Codes and Design Capacities

7. Description of Hazardous Wastes (Enter codes for Items 7.A, 7.C and 7.D(1))

Line Number		A. EPA Hazardous Waste No.	B. Estimated Annual Qty of Waste	C. Unit of Measure	D. Processes (1) Process Codes	D. Processes (2) Process Description (if code is not entered in 7.D(1))
0	1	SEE ITEM 11. (COMMENTS) BELOW				

8. Map

Attach to this application a topographical map, or other equivalent map, of the area extending to at least one mile beyond property boundaries. The map must show the outline of the facility, the location of each of its existing intake and discharge structures, each of its hazardous waste treatment, storage, or disposal facilities, and each well where it injects fluids underground. Include all spring, rivers, and other surface water bodies in this map area. See Instructions for precise requirements.

9. Facility Drawing

All existing facilities must include a scale drawing of the facility. See instructions for more detail.

10. Photographs

All existing facilities must include photographs (aerial or ground-level) that clearly delineate all existing structures; existing storage, treatment, and disposal areas; and sites of future storage, treatment, or disposal areas. See instructions for more detail.

11. Comments

ITEM 7: SEE SUPPLEMENT TO ITEM 7. DESCRIPTION OF HAZARDOUS WASTES [PAGES 2(toc) THROUGH 2(A-1) of 2 OF THIS PART A PERMIT APPLICATION]
ITEM 8: SEE ITEM 8 - TOPOGRAPHIC MAP, INTEC (PAGES 2h THROUGH 2i of 2)
ITEM 9: SEE ITEM 9 - FACILITY DRAWINGS, INTEC (PAGES 2j THROUGH 2l of 2)
ITEM 10: SEE ITEM 10 - FACILITY PHOTOGRAPHS, INTEC (PAGES 2m THROUGH 2n of 2 OF THIS PART A PERMIT APPLICATION)

ITEM 6 SUPPLEMENTS - PROCESS CODES & DESIGN CAPACITIES

Supplement A to Item 6.

PROCESS CODES AND DESIGN CAPACITIES

LINE NUMBER	PROCESS TYPE - UNIT NAME		PROCESS DESIGN CAPACITY
1	**S02 - TANK STORAGE includes:** • VES-WM-187, VES-WM-188, VES-WM-189, VES-WM-190 @ 300,000 gallons each		1,200,000 gallons
		Line 1 Total:	**1,200,000 gallons**

Supplement B to Item 6.

'Process Codes and Design Capacities' for the Idaho Nuclear Technology and Engineering Center

CONTENTS

ACRONYMS 2c

IDAHO NUCLEAR TECHNOLOGY & ENGINEERING CENTER - GENERAL INFORMATION 2d

1. INTEC TANK FARM FACILITY (TFF) 2e

FIGURES

1-1. INTEC Tank Farm Facility 2g

TABLES

1-1. INTEC Tank Farm Capacities 2f

ACRONYMS

CERCLA	Comprehensive Environmental Response, Compensation and Liability Act
CPP	Chemical Processing Plant
DOE	Department of Energy
HWMA	Hazardous Waste Management Act
ICDF	INL CERCLA Disposal Facility
ICPP	Idaho Chemical Processing Plant
INL	Idaho National Laboratory (formerly known as the Idaho National Engineering and Environmental Laboratory)
INTEC	Idaho Nuclear Technology and Engineering Center
PEWE	Process Equipment Waste Evaporator (system)
TFF	Tank Farm Facility
TSD	treatment, storage, or disposal

IDAHO NUCLEAR TECHNOLOGY AND ENGINEERING CENTER GENERAL INFORMATION

The Idaho Nuclear Technology and Engineering Center (INTEC), formerly the Idaho Chemical Processing Plant (ICPP or CPP), is located approximately three miles north of the Central Facilities Area. The plant is situated on approximately 210 acres that lie within the perimeter fence. The INTEC Sewage Treatment Plant is located on an additional fifty-five acres outside the INTEC facility perimeter fence. The Idaho National Laboratory (INL) Comprehensive Environmental Response, Compensation and Liability Act (CERCLA) Disposal Facility (ICDF) is located to the southwest of the INTEC facility perimeter fence. The ICDF Complex, including a buffer zone, is situated on approximately 40 acres outside the INTEC perimeter fence. Drawing Number G14-3001-01, in Item 9, shows the location of the INTEC at the INL. The INTEC Facility Plot Plan is a drawing of the INTEC facility showing the location of the interim status storage unit.

The mission of the plant is to receive and store spent nuclear fuels and radioactive wastes, treat wastes, and develop new waste management technologies for the U.S. Department of Energy (DOE). Before April 1992, this mission also included nuclear fuel reprocessing. However, reprocessing work was phased out, and consequently, part of the mission at the INTEC changed. Facilities once dedicated to the reprocessing of spent nuclear fuel are being converted to a safe and stable shutdown condition, while awaiting reuse or decontamination and decommissioning.

The scope of spent nuclear fuel storage at the INTEC has increased to accommodate a greater quantity of fuel in the future due to the cessation of reprocessing. The INL will continue to receive shipments of spent nuclear fuel for storage and preparation for final dispositioning, per agreement between the State of Idaho, the DOE, and the Navy.

Waste management activities at the plant include treatment and disposition of Hazardous Waste Management Act (HWMA)/Resource Conservation and Recovery Act (RCRA) regulated wastes, management of sodium-bearing liquid waste from decontamination and maintenance of equipment, storage of calcine in the Calcined Solids Storage Facility, and management of decontamination and decommissioning waste streams.

Technology development and implementation activities at the INTEC include spent nuclear fuel interim storage, improved radioactive waste treatment technologies, enhanced decontamination and decommissioning techniques, and investigation of waste processing technologies applications to production-scale operations.

The focus of the plant will continue to include fuel storage activities and cleanup activities. Major cleanup activities will include: treatment of high-level and liquid radioactive waste; characterization, repackaging, and shipment of remote-handled transuranic wastes; closure of liquid waste tanks; and remediation of contaminated environmental soil sites.

A description of the interim status storage unit located at the INTEC is provided in the following pages. Figures are located at the end of the section (e.g., Figure 1-1 for the INTEC Tank Farm Facility is located at the end of Section 1).

1. INTEC TANK FARM FACILITY (TFF)

Liquid wastes stored at the INTEC Tank Farm were generated from a variety of past INTEC operations including CPP-601 extraction process raffinates, Fluorinel Dissolution Process and Fuel Storage operations, and the Process Equipment Waste Evaporator (PEWE) system. Other waste sources have included the CPP-601 Deep Tanks, the PEWE cell floor drain tanks, the headend process tanks and process cells, the Westside Holdup Tanks, and the New Waste Calcining Facility. Figure 1-1 is a schematic of the tanks in the INTEC Tank Farm.

The INTEC TFF was formerly known as the ICPP Tank Farm Facility. The TFF stores liquid mixed waste from operational activities at the INTEC. From 1953 to 1992, the INTEC reprocessed spent nuclear fuel to recover Uranium-235. Dissolution of the spent fuel produced a mixed high-level waste that was stored in the TFF prior to conversion to a granular solid by calcination. Sodium-bearing waste is currently stored in the TFF.

Under the terms of the 1992 Consent Order and subsequent modifications, the DOE must permanently cease use of the TFF or bring the tanks into compliance with the secondary containment requirements as set forth in the Idaho Administrative Procedures Act 58.01.05.009 [Title 40 Code of Federal Regulations 265.193(d)(4) and (h)]. The fifth modification to the 1992 Consent Order specifies that DOE must cease use of tanks VES-WM-187 through VES-WM-190 by December 31, 2018.

The closure of many of the INTEC TFF tanks is complete, with only tanks VES-WM-187 through VES-WM-190 remaining.

The TFF was comprised of four horizontal cylindrical tanks (VES-WM-103 through VES-WM-106) and eleven underground storage tanks (VES-WM-180 through VES-WM-190). Table 1-1 summarizes TFF tank capacities.

Table 1-1. INTEC Tank Farm capacities.

Tank Designation	Capacity (gal)/Tank
VES-WM-103 through VES-WM-106	30,000
VES-WM-180 through VES-WM-181	318,000
VES-WM-182 through VES-WM-190	300,000

Tanks VES-WM-103 through VES-WM-106 are located underground north of CPP-619; they were maintained empty, except for heels from tank flushing and are isolated from the normal input side. Tanks VES-WM-103 through -106 were equipped with differential level instruments that indicate on a control panel. Each tank sits on a reinforced concrete pad with a dimension of 40 ft long by 14 ft wide by 1 ft high (concrete curb). The volume of the secondary containment for each tank (VES-WM-103 through VES-WM-106) was approximately 4,189 gallons. These tanks have undergone RCRA closure activities as part of Phase III of the TFF Closure. DEQ approved closure of these tanks on October 5, 2009.

Liquid levels in tanks VES-WM-180 through VES-WM-190 are measured by differential level instruments and electronic instruments using radio frequency probes. Resistance temperature sensors, attached to the radio frequency liquid level probes, measure the temperature of tank contents at several depths. These level and temperature measurements are fed into data processors; if the liquid level changes or exceeds preset limits, alarms are activated. Tanks VES-WM-180 through VES-WM-186 have undergone RCRA closure activities (so the above information is no longer applicable) and DEQ approved closure of these tanks on October 5, 2009.

Each of the remaining four underground storage tanks, VES-WM-187 through VES-WM-190, is totally enclosed in an underground concrete vault. Tanks VES-WM-187 through VES-WM-190 are enclosed in a cast-in-place, square, four-pack vault. The vault roofs are covered with earth for radiation shielding; the amount of covering is dependent on the vault design. The tanks rest on a thin layer of sand on top of a concrete pad at the bottom of the vault.

Each tank vault has at least one liquid collection sump to aid in leak detection. VES-WM-187 and VES-WM-188 have two sumps each, and VES-WM-189 and VES-WM-190 have two hot sumps and one larger, cold sump each. The sumps are equipped with liquid level sensors to detect leakage of tank contents or groundwater leakage into the vault. The volume of the secondary containment for each tank (VES-WM-187 through VES-WM-190) is approximately 703,767 gallons, which will contain 100% of the capacity of the largest tank (300,000 gal).

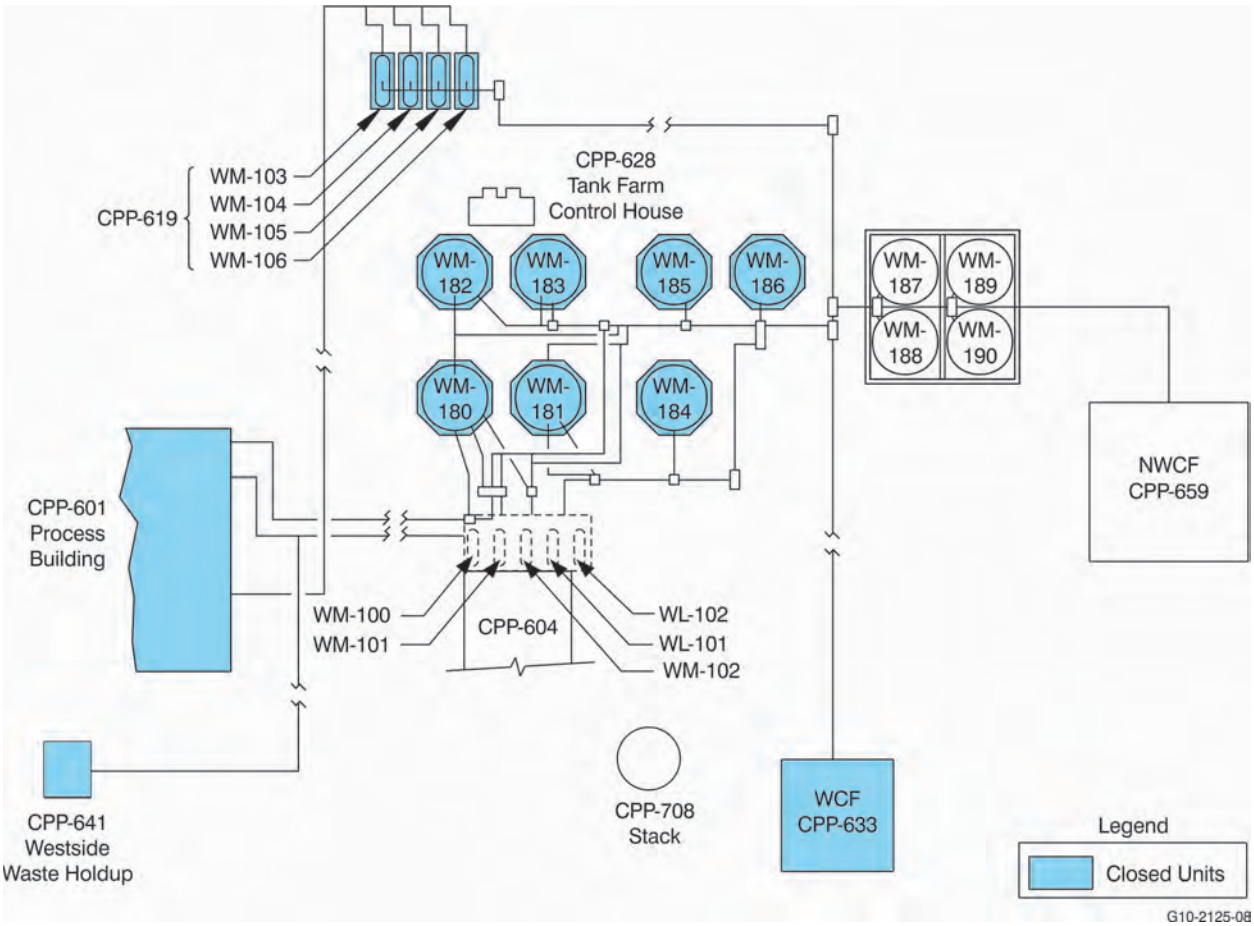

Figure 1-1. INTEC Tank Farm Facility.

ITEM 7 SUPPL PAGES
- DESCRIPTION OF
HAZARDOUS WASTES

ITEM 7. DESCRIPTION OF HAZARDOUS WASTE

TABLE OF CONTENTS

TSD UNIT	Page Number
INTEC TANK FARM TANKS (VES-WM-187 through VES-WM-190)	Page 2(A-1) of 2

ITEM 7. DESCRIPTION OF HAZARDOUS WASTES (ENTER CODES FOR ITEMS 7.A, 7.C AND 7 D(1))

Line No.	A. EPA Hazardous Waste No.	B. Estimated Annual Qty of Waste	C. Unit of Measure	D. PROCESSES	
				(1) PROCESS CODES	(2) PROCESS DESCRIPTION (If a code is not entered in 7.D(1))
1	D001	4,116	T	S02	INTEC TANK FARM TANKS (VES-WM-187, VES-WM-188, VES-WM-189, VES-WM-190)
2	D002				INCLUDED WITH ABOVE
3	D004				INCLUDED WITH ABOVE
4	D005				INCLUDED WITH ABOVE
5	D006				INCLUDED WITH ABOVE
6	D007				INCLUDED WITH ABOVE
7	D008				INCLUDED WITH ABOVE
8	D009				INCLUDED WITH ABOVE
9	D010				INCLUDED WITH ABOVE
10	D011				INCLUDED WITH ABOVE
11	D018				INCLUDED WITH ABOVE
12	D019				INCLUDED WITH ABOVE
13	D021				INCLUDED WITH ABOVE
14	D022				INCLUDED WITH ABOVE
15	D026				INCLUDED WITH ABOVE
16	D028				INCLUDED WITH ABOVE
17	D032				INCLUDED WITH ABOVE
18	D034				INCLUDED WITH ABOVE
19	D035				INCLUDED WITH ABOVE
20	D036				INCLUDED WITH ABOVE
21	D038				INCLUDED WITH ABOVE
22	D039				INCLUDED WITH ABOVE
23	D040				INCLUDED WITH ABOVE
24	F001				INCLUDED WITH ABOVE
25	F002				INCLUDED WITH ABOVE
26	F003				INCLUDED WITH ABOVE
27	F005				INCLUDED WITH ABOVE
28	U134				INCLUDED WITH ABOVE
29					
30					
31					
32					
33					

ITEM 8 - INTEC TOPOGRAPHICAL MAP

Item 8. 'Topographic Map'
Idaho Nuclear Technology and Engineering Center

Map Description

Topographic map of the Idaho Nuclear Technology and Engineering Center (INTEC)
(map revision date: February 11, 2025)

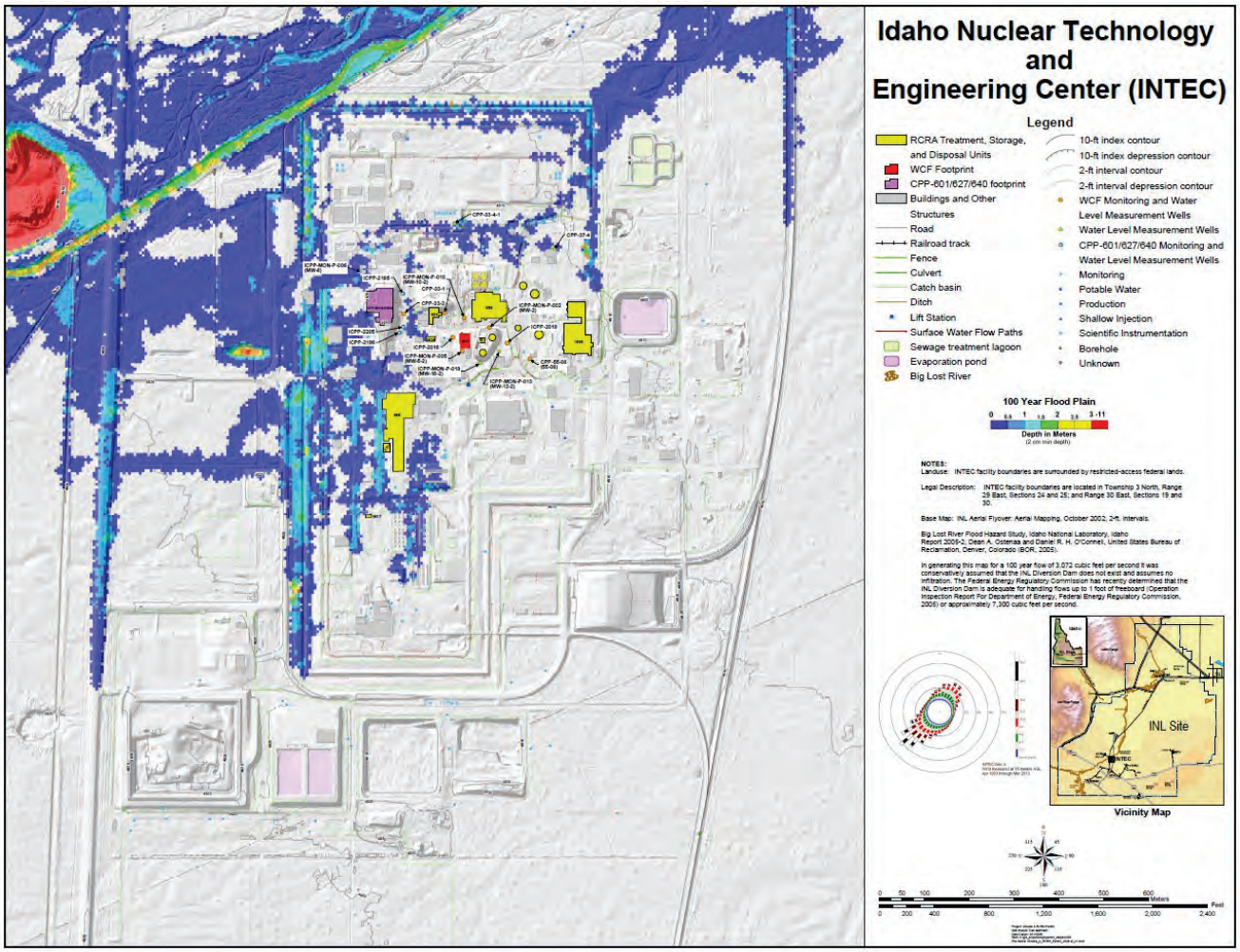

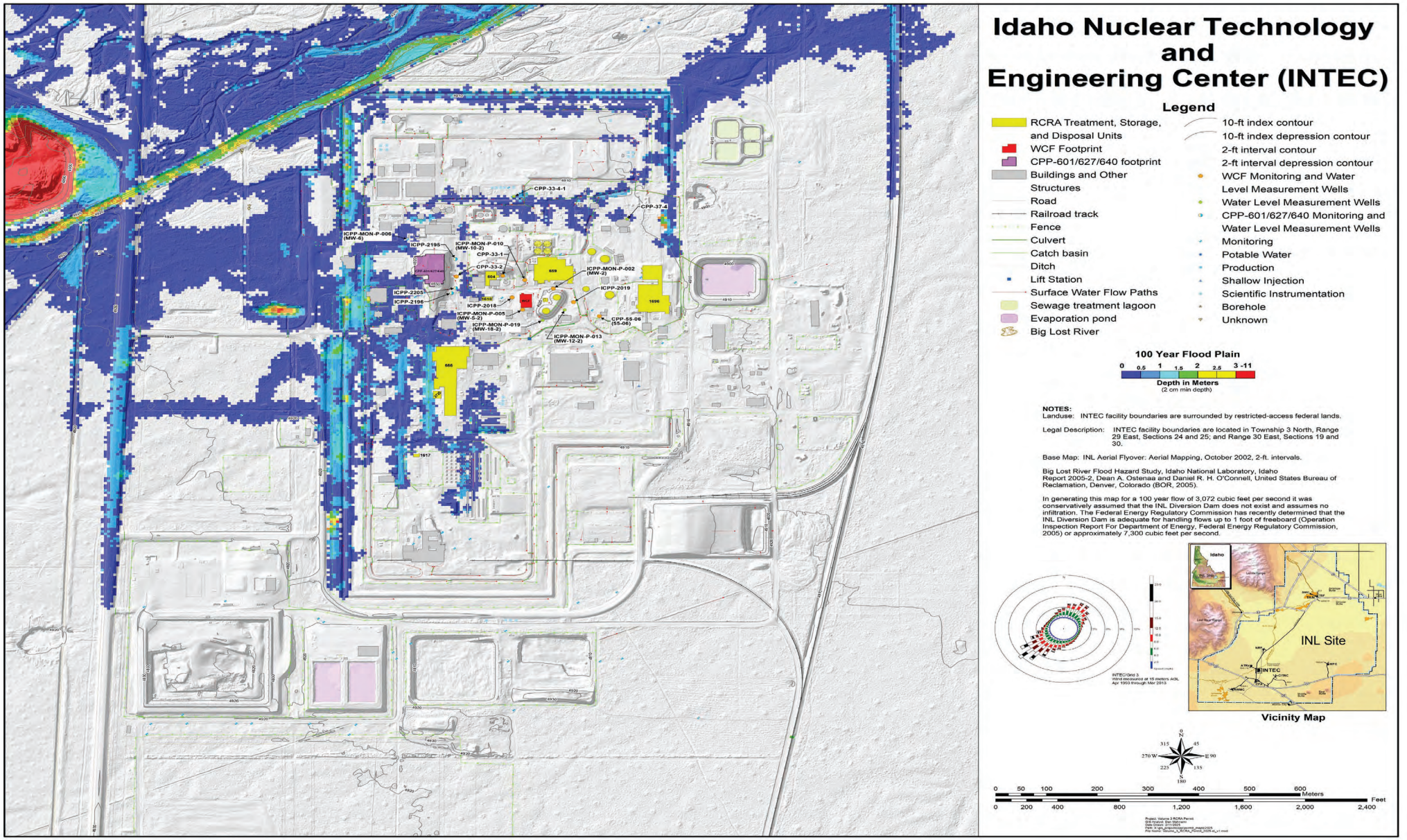
Idaho Nuclear Technology and Engineering Center (INTEC)
Legend
RCRA Treatment, Storage, and Disposal Units
WCF Footprint
CPP-601/627/640 footprint
Buildings and Other Structures
Road
Railroad track
Fence
Culvert
Catch basin
Ditch
Lift Station
Surface Water Flow Paths
Sewage treatment lagoon
Evaporation pond
Big Lost River
10-ft index contour
10-ft index depression contour
2-ft interval contour
2-ft interval depression contour
WCF Monitoring and Water Level Measurement Wells
Water Level Measurement Wells
CPP-601/627/640 Monitoring and Water Level Measurement Wells
Monitoring
Potable Water
Production
Shallow Injection
Scientific Instrumentation
Borehole
Unknown
100 Year Flood Plain
0 0.5 1 1.5 2 2.5 3 -11
Depth in Meters
(2 cm min depth)
NOTES:
Landuse: INTEC facility boundaries are surrounded by restricted-access federal lands.
Legal Description: INTEC facility boundaries are located in Township 3 North, Range 29 East, Sections 24 and 25; and Range 30 East, Sections 19 and 30.
Base Map: INL Aerial Flyover: Aerial Mapping, October 2002, 2-ft. intervals.
Big Lost River Flood Hazard Study, Idaho National Laboratory, Idaho Report 2005-2, Dean A. Ostenaa and Daniel R. H. O'Connell, United States Bureau of Reclamation, Denver, Colorado (BOR, 2005).
In generating this map for a 100 year flow of 3,072 cubic feet per second it was conservatively assumed that the INL Diversion Dam does not exist and assumes no infiltration. The Federal Energy Regulatory Commission has recently determined that the INL Diversion Dam is adequate for handling flows up to 1 foot of freeboard (Operation Inspection Report For Department of Energy, Federal Energy Regulatory Commission, 2005) or approximately 7,300 cubic feet per second.
Idaho
INL Site
INTEC
Vicinity Map
0 50 100 200 300 400 500 600 Meters
0 200 400 800 1,200 1,600 2,000 2,400 Feet

ITEM 9 - INTEC
FACILITY DRAWING

Item 9. 'Facility Drawings'
Idaho Nuclear Technology and Engineering Center

Drawing Number	Drawing Description	Page Number
G14-3001-01	Map of the INL showing major facility locations	2k
N/A	Idaho Nuclear Technology and Engineering Center (INTEC) Facility Plot Plan	2l

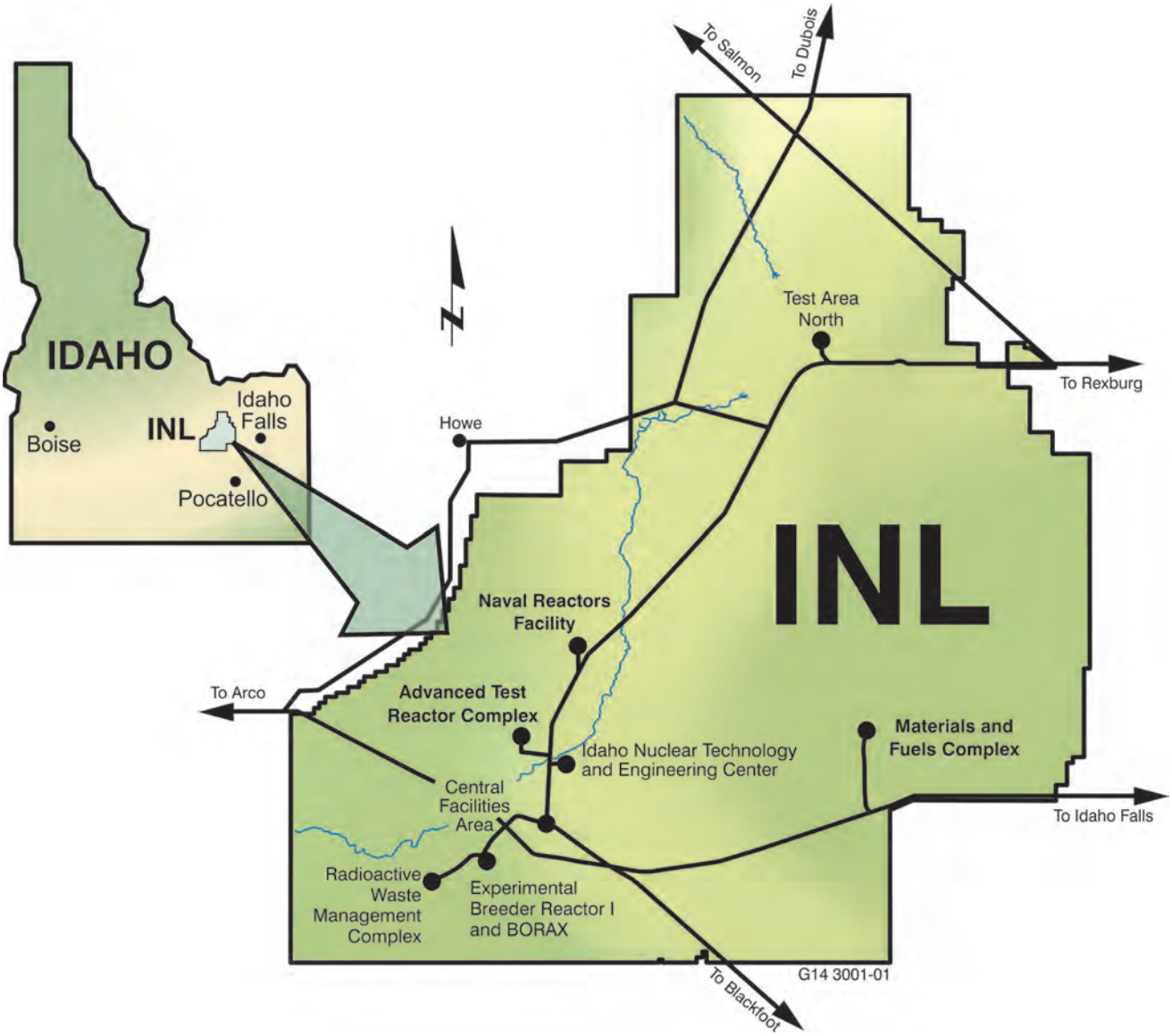

Drawing Number G14-3001-01. Map of the INL showing major facility locations

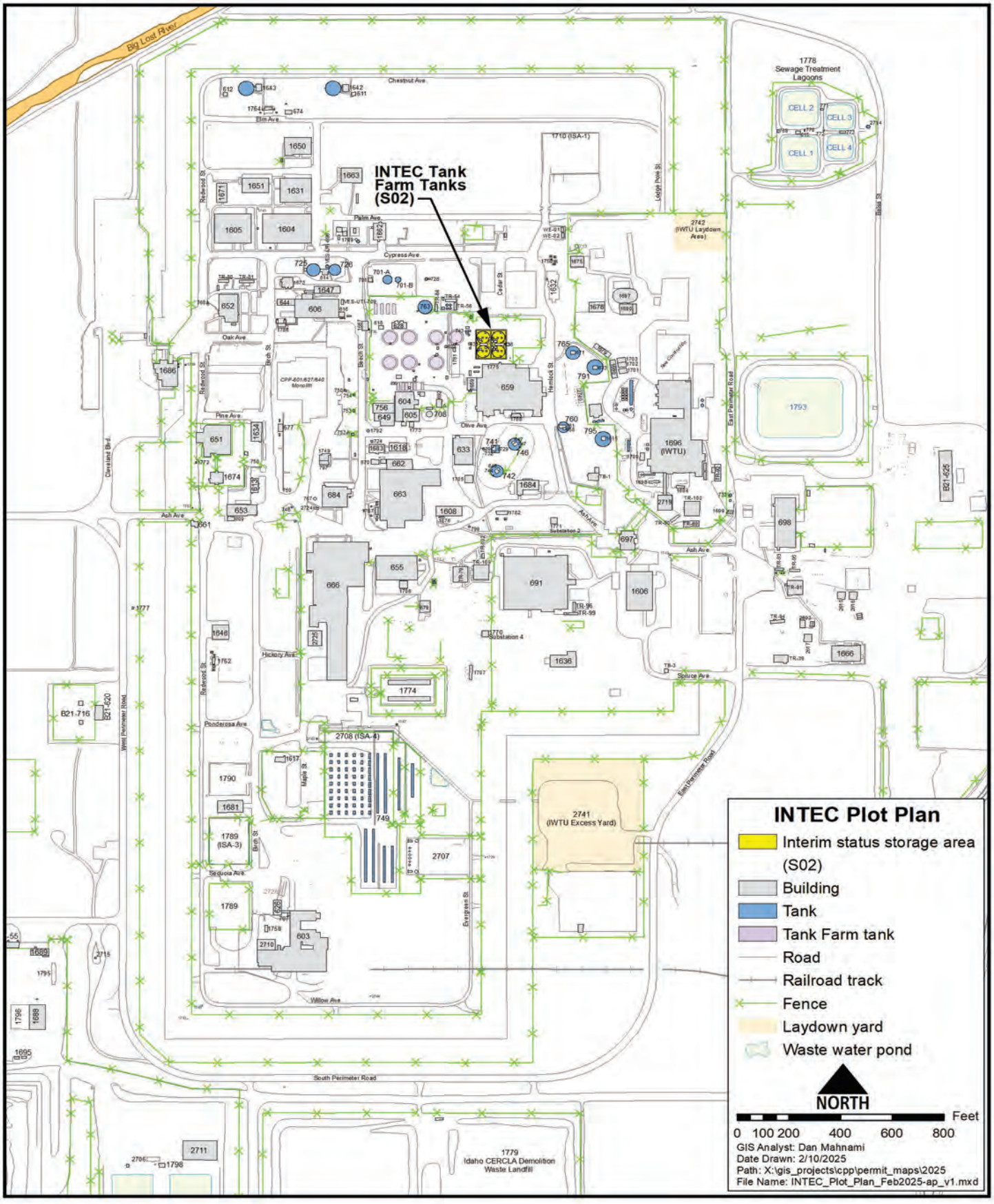

Idaho Nuclear Technology and Engineering Center (INTEC) Facility Plot Plan

ITEM 10 - INTEC
INTERIM STATUS UNIT
PHOTOGRAPHS

Item 10. Photographs
Idaho Nuclear Technology and Engineering Center (INTEC)

Photo Number	Photo Description – Unit Process Code(s)	Date of Photo	Page Number
N/A	Aerial View of 4-pak tents at the INTEC Tank Farm Facility – S02	09/13/2012	2n



Aerial View of 4-pak tents at the INTEC Tank Farm Facility.